JUNE 2005

www.heatlock.com

Standardized systems for unique, hot-runner solutions, ceramic insulated

HEATLOCK

This Heatlock series, below, is currently being replaced by the A1-series of nozzles.
Before you design check availability, stock is gradually decreased.
Spare parts will be available until at least end of 2007 (apart form NPT1 bodies)

Welcome to Heatlock, ceramically insulated hot-runner systems

Dear Customer,

Heatlock catalogue for the 21st century.

We are proud to present a catalogue which is completely reworked.

Heatlock hot runners are known for their yellow cermic which insulates all the contact points and centering points from the tool. We were first in the world with this at the K82 Exhibition. The ceramic, which has only 7% of the conductivity of steel, is being developed today for use in other areas. Our "Ceramic concept" where we also use ceramic in the gate for insulating it and giving better wear resistance, a world news which was introduced at the K98 Exhibition.

Today we deliver everything from single cavity solutions to complete project-adapted, calculated mould flow, hot runners.

All over the world, we are close to our customers. You always have for example the latest information on our company internet site "heatlock.com".

We look forward to being your hot runner partner in the new millenium.

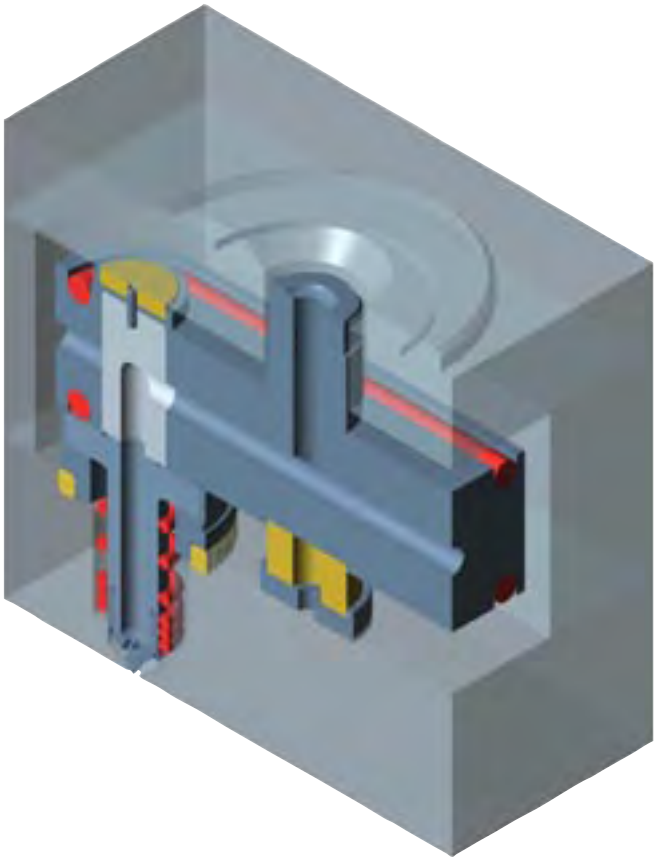

This Heatlock series, below, is currently being replaced by the A1-series of nozzles.
Before you design check availability, stock is gradually decreased.
Spare parts will be available until at least end of 2007 (apart form NPT1 bodies)

For a complete list of our distributor around the world, please refer to our website **www.heatlock.com**

För en detaljerad lista över våra distributörer världen över, besök vår hemsida **www.heatlock.com**

LKM Heatlock Co Ltd

Hong Kong
LKM Heatlock Company Ltd.
2/F., Cheung Kong Electronic Bldg.
4 Hing Yip Street, Kwun Tong,
Kowloon, Hong Kong
Phone: (852) 2342 2248, 2341 2321
Fax: (852) 2341 8544, 2343 0990
E-mail: lkmheatlock@lkm.com.hk

China
LKM Heatlock Company Ltd.
Qiao Li Ind. Area, Chang Ping
Dongguan Guangdong,
China 523586
Phone: (86) 0769 333 0020
Fax: (86) 0769 381 0484
E-mail: lkmheatlock@lkm.com.hk

Sweden
Heatlock AB
Box 236, S-532 23 Skara, Sweden
Phone: +46 511 13200
Fax: +46 511 17285
E-mail: hot.runner@heatlock.com

LKM Asian Network
Shanghai
Shanghai Lung Kee Metal Products Co Ltd
68 Min Yi Road, Xinqiao Section, Songjiang Ind. District
Shanghai, China 201612
Phone: (86) 021 5768 6371
Fax: (86) 021 5768 6375

Japan
Lung Kee Metal Japan Co Ltd
8/F., Atsuma Building
16-5, Ryogoku 2-Chome, Sumida-Ku
Tokyo, Japan 130-0026
Phone: (81) 03-5625 5020 Fax: (81) 03-5625 5021
914-1, Yoshida, Oizumi-machi, Oura-gun,
Gumma-ken, Japan 370-0523
Phone: (81) 0276 20 3900 Fax: (81) 0276 20 3901

Taiwan
Taiwan Supertech Industrial Co Ltd
No. 28 Lane 267, Sec. 3, Min Sheng Road
Ta Ya Hsiang, Taichung Hsien, Taiwan R.O.C.
Phone: (886) 04 2568 1155
Fax: (886) 04 2568 1160

Malaysia
Lung Kee Metal (Malaysia) Sdn. Bhd
Lot 825 (1 & 2A), Jalan SS13/1K
Kawasan Perindustrian Subang Jaya
47500 Petaling Jaya, Selangor Darul Ehsan, Malaysia
Phone: (6) 03 5633 9862
Fax: (6) 03 5633 2659

Date: 031118, © LKM Heatlock Co Ltd

Heatlock Distributors

AUSTRALIA
EOC Normalien Pty Ltd
51 Shearson Crescent
Mentone, Victoria
3194, Australia
Phone: (03) 9583 0166
Fax: (03) 9584 1119
E-mail: eocaust@netspace.net.au

DENMARK
HCT-Tool A/S
Baltorpsbakken 10
DK-2750 Ballerup
Denmark
Phone: +45 70 20 31 31
Fax: +45 70 20 31 51
E-mail: hct@hct.dk

GERMANY
i-mold
Heidelbergerstr. 24
64395 Brensbach
Tel: +49 (0) 6161-8070-0
E-mail: info@i-mold.com

NORWAY
Deli VerktSenter AS
Deliveien 5
N-1540 VESTBY
NORWAY
Tel: +47 6495 6218
Fax: +47 6495 6202
E-mail: dvs@strack.no

UNITED KINGDOM
Diemould Service Co Ltd
Blenheim Rd
High Wycombe
GB-Bucks, HP 12 3RS
Phone: (01494) 523811
Fax: (01494) 452898
E-mail: sales@dms-diemould.co.uk

FINLAND
Valmisosa Oy
Eteavayla20
SF-28610 Pori
Puh: 939-331 744
E-mail: val@saunalaht.fi

ISRAEL
A.Zilka Marketing & Engineering Ltd
Technical Support
Tel: +972-3-5584-936
Fax: +972-3-5584-937
Mobile Number: +972-505-250-029
(Avraham Zilka)
E-mail: ranzilka@bezeqint.net

ITALY
A E D
Via Costavernesse, 36
I-36060 Molvena (Vicenza)
Tel: 0424/708662
Fax: 0424/418112
E-mail: aedfern@tin.it

PORTUGAL
Heatlock AB
S:t Annagatan 3
Box 236
SE-532 23 Skara, Sweden
Tel:+46 511 132 00
Fax: +46 511 172 85
E-mail: hot.runner@heatlock.com

SYRIA
Polymeric Technical Products
Abed St. Oubary Bldg.
Damaskus
Tel:+963 11 6351510
Fax: +963 11 6351510
E-mail: wayoub@gmx.net

SWEDEN
N. Helldin AB
Box 236
SE-532 23 Skara
Tel: +46 511 132 00
Fax: +46 511 172 85
E-mail: info@helldin.com
Website: www.helldin.com

SWITZERLAND
Heatlock AB
S:t Annagatan 3
Box 236
SE-532 23 Skara, Sweden
Tel: +46 511 132 00
Fax: +46 511 172 85
E-mail: info@helldin.com
Website: www.helldin.com

NETHERLANDS
Obinion Plastics Machinery
Handelsweg 15
5527 Al Hapert
The Netherlands
Phone: +31 (0)497 38 38 09
Cell: +31 (0)6 38 75 30 80
Fax: +31 (0)842 24 44 49
E-mail: info@obinion.com

POLAND
Roal S.C.
A. Jackowiak, R. Kowanski
Armii Krajowej 95/21
PL-61 381 Poznan
Tel: +48 61 843 4581
Fax: +48 61 843 4581
E-mail: poznan@fcpk.pl

BULGARIA
Commset Ltd
6" Studeno Kladenche" str.
Sofia, Bulgaria
Phone: +359 2 961 1134
Fax: +359 2 961 1134
E-mail: commset@netplus.bg

JAPAN
Lung Kee Metal Japan Co Ltd
8/F., Atsuma Building
16-5, Ryogoku 2-Chome, Sumida-Ku
Tokyo, Japan 130-0026
Phone: (81) 03-5625 5020
Fax: (81) 03-5625 5021
E-mail : lkmsales@lkmj.co.jp

CHINA
LKM Heatlock Company Ltd
Qiao Li Ind. Area, Chang Ping
Dongguan Guangdong
China 523586
Phone: (86) 0769 333 0020
Fax: (86) 0769 393 9020
E-mail: lkmheatlock@lkm.com.hk

TAIWAN
Taiwan Supertech Industrial Co., Ltd
No.28, Lane 267 Sec. 3
Min Sheng Road, Ta Ya Hsiang
Taichung Hsien, Taiwan
Phone: (886) 04-2568 1155
Fax: (886) 04-2568 1160
E-mail: jamkf@mail.moldbase.com.tw

HONG KONG
LKM Heatlock Company Ltd
2/F., Cheung Kong Electronic Bldg.
4 Hing Yip Street, Kwun Tong
Kowloon, Hong Kong
Phone: (852) 2342 2248, 2341 2321
Fax: (852) 2341 8544, 2343 0990
E-mail: lkmheatlock@lkm.com.hk

INDIA
Pillai and Peter Associates Pvt. Ltd
Shop No.6, Lourdes Apts.
Gautam Buddha Rd, Opp. Orlem Church
Orlem, Malad (W), MUMBAI-400 064
Phone: 0091-22-862 69 00
Fax: 0091-22-862 69 00
E-mail: anish@giasbmc.vsnl.net.in

KOREA
Heatlock Korea / Execo Inc.
Suite 1017, Midas Bldg
775-1 Janghang-dong ilsan-Gu Goyang-Si
Kyungki-do
Phone: +82 (0) 31 908-3280
Fax: +82 (0) 31 905-3288
E-mail: execo@bora.dacom.co.kr

MALAYSIA
Lung Kee Metal (Malaysia) Sdn Bhd
Lot 825 (1&2A), Jalan SS13/1K
Kawasan Perindustrian Subang Jaya
47500 Petaling Jaya, Selangor Darul Ehsan
Malaysia
Phone: (6) 03 5633 9862
Fax: (6) 03 5633 2659
E-mail lkm@lkmm.po.my

SINGAPORE
Nihon Industrial Products Pte Ltd
157 Sin Ming Road, #02-01 Amtech Bldg.
Singapore 575624
Phone: 65-5523809
Fax: 01668281087
E-mail: nihon@cyberway.com

CANADA
Diemould Service Co (Canada) Ltd
1629 Turner Rd, Windsor
Ontario N8W 3J8
Phone: (519) 253 2431
Phone: (800) 265 4885
Fax: (519) 253 2533
Fax: (800) 845 3807
E-mail: dmscan@windsor.igs.net

U.S.A.
Diemold Supply DMS Inc.
17197 Newhope Street, Unit I,
Fountain Valley, California 92708

Die Mold Supply DMS Inc.
106R Oak Street
Taunton, Massachusetts 02780

Diemold Service Company
737, Central Avenue,
Wood Dale, Illinois 60191

This Heatlock series, below, is currently being replaced by the A1-series of nozzles.
Before you design check availability, stock is gradually decreased.
Spare parts will be available until at least end of 2007 (apart form NPT1 bodies)

Date: 031118, © LKM Heatlock Co Ltd

This Heatlock series, below, is currently being replaced by the A1-series of nozzles.
Before you design check availability, stock is gradually decreased.
Spare parts will be available until at least end of 2007 (apart form NPT1 bodies)

Contents:

Introduction 1.01
Guide to Heatlock 1.04
Why hot-runners? 1.06
Gate diameters 1.08
Heatlock Toolkit 1.09

Heatlock Bushings

ESB1, electric sprue bush mini 2.01
ESB2, electric sprue bush 2.02
ESB3, electric sprue bush 2.03
ESB4/ESB4 Vario, electric sprue bush 2.04
PPB1, pin point bush 2.05
PPB2, pin point bush 2.06
PPB3, pin point bush 2.07
NPT1, needle point topless 2.08
NPT1-Xtnd, needle point topless extended 2.09
NPT2, needle point topless 2.10
TOP2, torpedo 2.12

Heatlock Bushing ancilliaries

Cartridges 2.50.1
Coilheaters 2.50.3
Heaterbands 2.50.4
Thermocouples 2.50.5
O-rings 2.50.6
Ceramic 3.1

Heatlock Manifolds

Introduction / inledning 4.1.2
Heatlock Manifold Design / Heatlock översikt balk 4.1.3
Heatlock Toolkit 4.1.4
Heatmandoc 4.1.6
Manifold assembly / monteringsanvisning 4.1.8
Heatlock Standard Manifold I-type 4.2.1
Heatlock Standard Manifold H-type 4.3.1
Heatlock Standard Manifold X-type 4.4.1
Heatlock Standard Manifold X^2-type 4.5.1
Heatlock Custom Manifold / kundanpassad balk 4.6.1

Manifold Ancillaries

Introduction / inledning 4.50.1
Feedbushes, Bandheaters, Purge Guards and Ceramics 4.50.2
Tubular heater MHI / element MHI 4.50.3
Tubular heater MHX / element MHX 4.50.4
Straight Tubular Heater RH / rakt element RH 4.50.5
Wires MHWIRE/ kabel MHWIRE. 4.50.6
Thernocouples / Termoelement 4.50.7
Seals and Plugs / Brickor och pluggar 4.50.8
Plugs and connectors / Maskinkontakter 4.50.9

Heatlock Digital Controllers

Digital Controllers 5.1

Heatlock Filter Nozzles

Filter Nozzles 6.1

Appendix

Assembly Instructions Bushings 8.1

Conversion table (inches / mm) 9.1

This Heatlock series, below, is currently being replaced by the A1-series of nozzles.
Before HEATLOCK® check availability, stock is gradually decreased.
Spare parts will be available until at least end of 2007 (apart form NPT1 bodies)

HEATLOCK®	ESB1…	ESB2…	ESB3…	ESB4…	PPB1…	PPB2…	PPB3…
••• Excellent •• OK • Contact Heatlock – not recommend.	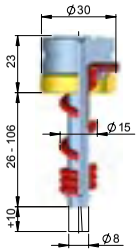	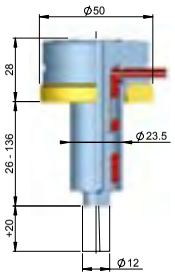	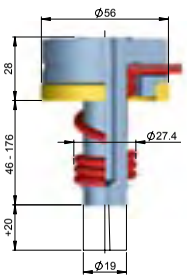	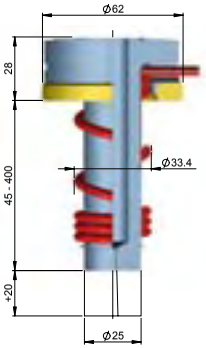	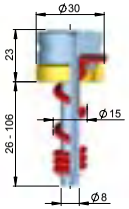	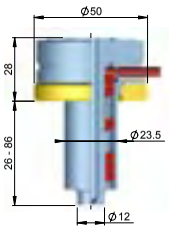	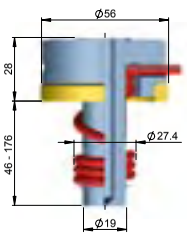
	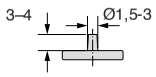	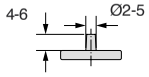	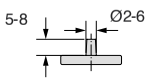	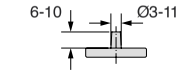	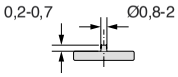	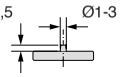	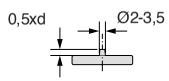
Low-viscosity PE, PS,PP	200g	400g	2000g	4500g	200g	400g	1000g
Medium-viscosity ABS, PA, POM, SAN	100g	300g	1400g	2800g	100g	300g	400g
High-viscosity	30g	150g	700g	1700g	30g	150g	200g
PP	•••	•••	•••	•••	••	••	••
PS, PE	•••	•••	•••	•••	•••	•••	•••
ABS	•••	•••	•••	•••	•••	•••	•••
PA6	•••	•••	•••	•••	–	–	–
POM	•••	•••	•••	•••	••	••	••
SAN	•••	•••	•••	•••	••	••	••
PA6.6	•••	•••	•••	•••	–	–	–
PC	•••	•••	•••	•••	•••	•••	•••
PMMA	•••	•••	•••	•••	–	–	–
PPO	•••	•••	•••	•••	•	•	•
PET, PBT, PES, PEEK,	•••	•••	•••	•••	–	–	–
Low/Med viscosity+GL	•••	•••	•••	•••	–	–	–

Date: 030928, © LKM Heatlock Co Ltd

This Heatlock series, below, is currently being replaced by the A1-series of nozzles.
Before you design check availability, stock is gradually decreased.
Spare parts will be available until at least end of 2007 (apart form NPT1 bodies)

HEATLOCK®	PPB4…… mod. ESB4300…	NPT1……	NPT1-Xtnd……	NPT2……	NPT3……	NPB4…… mod.ESB4300...	TOP2……
••• Excellent •• OK • Contact Heatlock – not recommend.	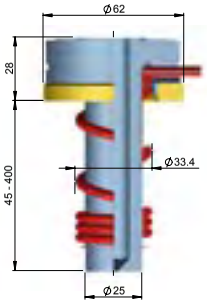	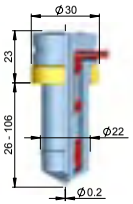	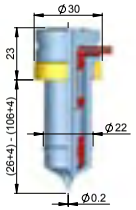	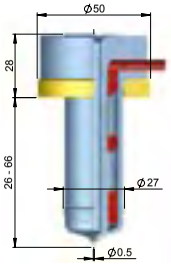	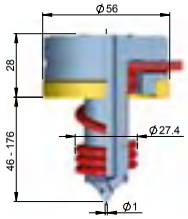	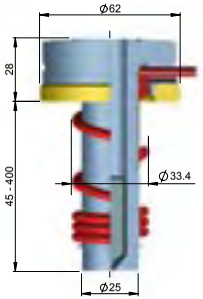	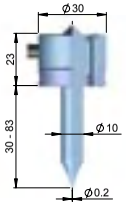
	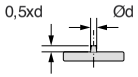	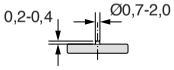	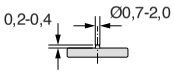	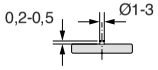	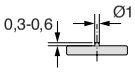	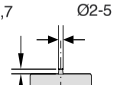	
Low-viscosity PE, PS,PP	2000g	150g	150g	350g	1000g	1500g	80g
Medium-viscosity ABS, PA, POM, SAN	1000g	100g	80g	150g	500g	800g	40g
High-viscosity	500g	30g	20g	30g	300g	350g	30g
PP	••	•••	•••	•••	•••	••	•••
PS, PE	•••	•••	•••	•••	•••	•••	•••
ABS	•••	•••	•••	•••	•••	•••	•••
PA6	–	•••	•••	•••	•••	•••	••
POM	••	•••	•••	•••	•••	•••	••
SAN	••	•••	•••	•••	•••	•••	•••
PA6.6	–	•••	•••	•••	•••	•••	••
PC	•••	••	•••	•••	•••	•••	••
PMMA	–	•	•	•	•	•••	•
PPO	•	••	••	••	••	•••	••
PET, PBT, PES, PEEK,	–	•	•	•	•	••	•
Low/Med viscosity+GL	–	-	-	-	-	••	-

This Heatlock series, below, is currently being replaced by the A1-series of nozzles.
Before you design check availability, stock is gradually decreased.
Spare parts will be available until at least end of 2007 (apart form NPT1 bodies)

How you can be more effective and more competitive by using our ceramically insulated Heatlock hot-runner system.

The old way with a cold sprue

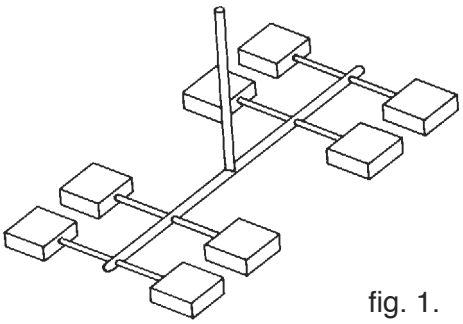

fig. 1.

Improved efficiency with a Heatlock sprue bushing

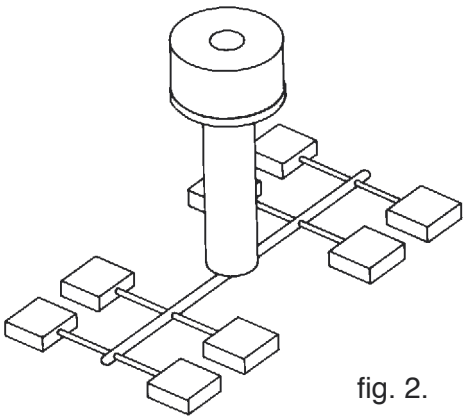

fig. 2.

Let us assume you are going to make a new mould with 8 cavities.
If you make it in the old way will it look as fig1.

Measured on the sketch the maximum length of flow in cold steel is 75mm.

Please note as well that flow lengths to each different cavity are not equal which means you will not have an identical fill of each cavity.

If you make the mould as shown in fig.2 and use a Heatlock electric sprue bush will you eliminate the conventional thick and long sprue.
In many cases the part which has the thickest wall section determines cooling time instead of each cavity.

Advantages:

- Flow length in cold steel has been reduced by 38%. Everyone familiar with injection moulding knows that it is easier to mould when flow length is short.
- Cycle time can be reduced, the thickest part of the shot has been eliminated.
- Less production stops – no sprue that can get stuck in the fixed half of the mould.
- No risk on automatic production that last shot will stick on earlier produced ones when ejected. The most difficult part to cool has been eliminated.
- Opening stroke can be reduced as part height is decreased with shorter cycle time as a result.

Fig 3. demonstrates an improvment using 2 electric sprue bushes, ESB's, including a manifold.
You now produce the following advantages:

Date: 031118, © LKM Heatlock Co Ltd

— Length of flow in cold steel compared to fig. 1 has now been reduced by not less than, 68%.
— Through the shortened flow length runners can be made considerably thinner .
— Injection time can be shortened.
— Because of the short flow length, material temperature can be reduced and cooling time can be shortened.
— Flow length is exactly the same to each cavity from the electric sprue bush which is one provision needed in order to get identical parts from the different cavities.

The best results are as in fig. 4 using direct gating, one bush for each cavity. This gives the technically optimal result.

— Length of flow is only 11% compared with fig. 1.
— It is usually easier to fill the cavity form a centrally placed gate.
— Cavity filling can be positively controlled through temperature control of the different bushes.

Which alternative should you choose?

This depends on:

— How many of the advantages you want to achieve.
— How much you are prepared to invest.

We will be pleased to serve you in choosing the most suitable Heatlock equipment from our wide range of hot-runner bushes. Advising you the most favourable manifold system suitable to your mould.

Reduce flow length in cold steel by 68%

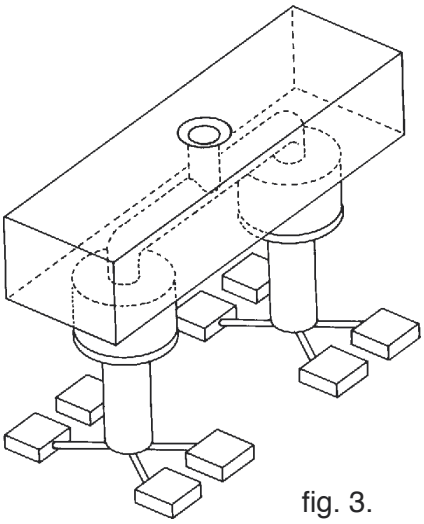

fig. 3.

Direct gating usually is the most effective way.

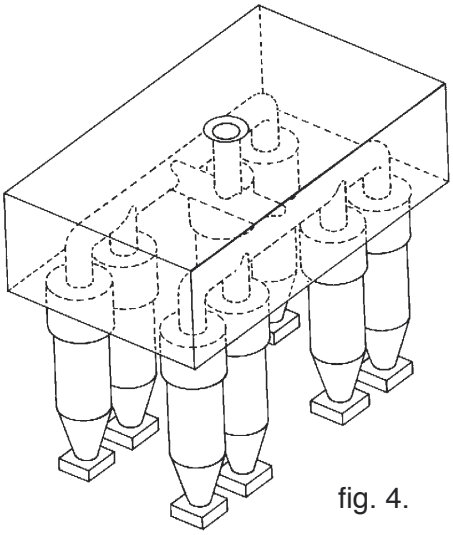

fig. 4.

This Heatlock series, below, is currently being replaced by the A1-series of nozzles.
Before you design check availability, stock is gradually decreased.
Spare parts will be available until at least end of 2007 (apart form NPT1 bodies)

To determine gate diameter

For bushes and torpedoes

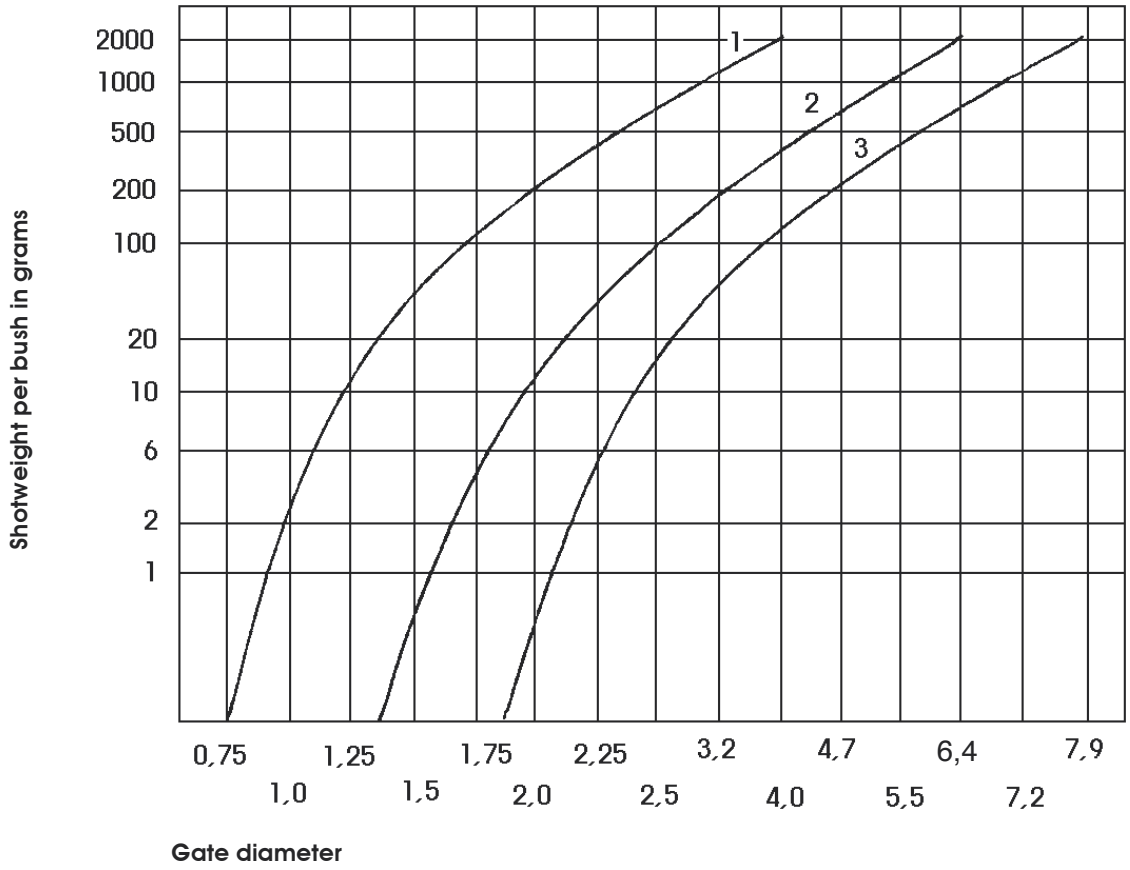

1. Low viscosity materials, PS, PE, PP
2. Medium viscosity materials ABS, SAN, PA, POM
3. High viscosity materials PC, PMMA, Noryl, PUR, re-inforced materials

The diagram above gives a guideline figure for the gate diameter needed for different plastics and shot weights.
Note: If the gate diameter is too small, an unnecessarily high bushing temperature will have to be set for the gate not to freeze between shots.
The suggested figures are approximate. Gate dimension may be influenced by the shape of the part and the design of the mould etc.

The balance between shot weight, injection rate, tool temperature, temperature pattern opposite gate, cooling around gate and injection pressure are all factors that affect gate size. A small gate freezes quicker than a large gate.
On injection moulding with very short cycle times and short injection times, it may be necessary to design gate cooling so that it does not overheat.

If the sprue bushing is feeding a runner which has a gate into a cavity, it may be suitable to make the bushing gate larger than actually necessary. This way pressure drop and shear will be reduced.
If an electric sprue bushing is used to feed a runner, this means that length of flow in cold steel has been reduced equivalent to the bushing length. Due to this cross section, the runner can be made smaller than usual. This is important in order to get shortest possible cycle time.
Start with a smaller gate than indicated in the table.

Date: 031118, © LKM Heatlock Co Ltd

This Heatlock series, below, is currently being replaced by the A1-series of nozzles.
Before you design check availability, stock is gradually decreased.
Spare parts will be available until at least end of 2007 (apart form NPT1 bodies)

- **Design a hot-runner system in a flash**
- **Easy navigation system**
- **Available in all common file formats**
- **Catalogue in PDF format having bookmarks**

Heatlock CAD Library

Our CAD Library is available both on CD-Rom and on Internet. We have made a menu system that makes it very easy to get the drawing you need.
If you work from our CD-Rom, just insert the CD in your computer and you will be guided through the steps to get the drawing you prefer. Our Internet solution is excactly the same, for your conveniance.

Vårt CAD Library finns tillgängligt både på CD-Rom och på Internet. Vi har utvecklat ett enkelt meny-system som gör det mycket enkelt att finna ritningen Du behöver.
Om du jobbar från CD:n, stoppa helt enkelt in den i datorn och du vägleds genom alla steg. På Internet kommer Du att känna igen menysytemet från CD:n, det är precis likadant.

This Heatlock series, below, is currently being replaced by the A1-series of nozzles.
Before you design check availability, stock is gradually decreased.
Spare parts will be available until at least end of 2007 (apart form NPT1 bodies)

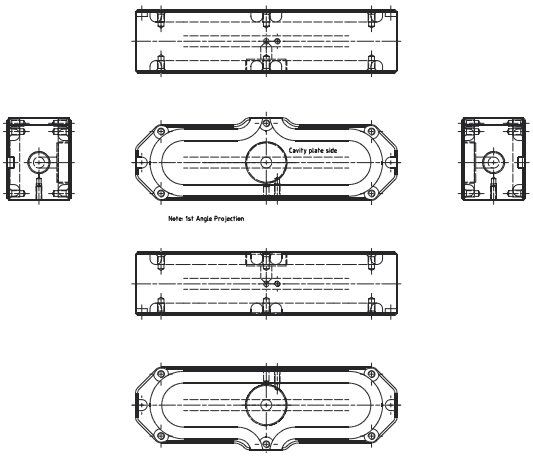

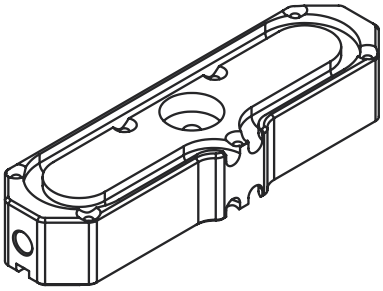

Heatlock 2D CADLibrary

Above is an example of how the drawing of a manifold will be presented when running a CAD application. All drawings in .dwg format. **All drawings in the CADkit are in 1st angle projection**.

Ovan ses ett exempel på hur våra ritningar visas när du kör ditt CAD program. Alla ritningar är i .dwg format. **Alla våra ritningar återges i "1st angle projection".**

Heatlock 3D CADLibrary

Our 3D CAD Library is delivered in three different versions, depending on the choise of file format. **Available in IGES, STEP and PARASOLIDS.**

Vårt 3D CAD Library levereras i tre olika versioner, beroende av vilket filformat Du föredrar. **Finns tillgängligt i IGES, STEP och PARASOLIDS.**

Part No.	Description	Content
HEATLOCK-IGS	2D-DWG / 3D-IGES	On CD-ROM
HEATLOCK-STP	2D-DWG / 3D-STEP	On CD-ROM
HEATLOCK-XMT	2D-DWG / 3D-PARASOLIDS	On CD-ROM

Date: 031118, © LKM Heatlock Co Ltd

Heatlock ESB1…,Mini.

Features

- Exceptionally uniform heat distribution along the bushing.
- Bushing can be used with practically every material in use today.
- Plastic undergoes lowest possible thermal stress.
- Compact.

Egenskaper

- Utomordentligt jämn värmefördelning längs bussningen.
- Bussningen går att använda med i stort sett alla av dagens existerande material.
- Minsta möjliga termiska påkänning på plasten.
- Kompakt.

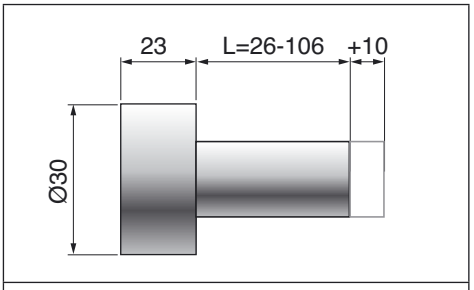

Shot weights <200 g

ESB1

bushing is compact, with shortest installation length L=26mm, and smallest centre spacing 30mm. The flow duct is 4 mm in diameter and is made from a single piece of hardened hot-worked steel.

As on our other models, heat is supplied by an asymmetrical spiral element to optimise heat distribution. The separate thermocouple measures the temperature at the middle of the tube, where it is hottest. If anything needs replacing you need only change the defective part; this saves you money.

The bushing is fully insulated from the mould with our special ceramic material, which has only 7% of the thermal conductivity of steel and a compressive strength of 2100 N/mm^2. This significantly reduces heat loss to the tool, making temperature distribution in the bushing very uniform.

The gate residue left by the bushing is 3 to 4mm long. If a special profile is to be machined at the forward end a bushing, one with +10mm extra length should be chosen.

May be used in single- and multi-cavity tools, together with our fully insulated Heatlock “Minifolds”, standard manifolds or a custom made conventional manifold that is ceramically insulated.

ESB1

Bussningen är kompakt och har ett minsta inbyggnads mått "L"= 26 mm, min. centrumavstånd 30 mm. Flytkanalen har Ø 4, röret är tillverkat i ett stycke varmarbetsstål som härdats.
Värmetillförseln sker som med ett olikformat spiralelement för att ge så jämn värmefördelning som möjligt. Termoelementet som är separat mäter temperaturen på rörets mitt, där det är som varmast. Går något sönder behöver du bara byta det som är trasigt, det spar Du pengar på.

Bussningen är helt isolerad från formen med vår speciella keramik som endast har 7% av stålets värmeledningsförmåga och en tryckhållfasthet på 2100 N/mm^2. Härigenom minskas värmeförlusterna ut till verktyget betydligt. Temperaturen i bussningen blir mycket jämn.

Bussningen lämnar en intagsrest på mellan 3–4 mm. Vill man att intagsresten skall vara kortare, kan man gnista ur bussningen invändigt så att en kortare rest erhålles. Skall en speciell profil bearbetas i framändan väljer man bussningen med extra längd +10 mm.

Kan användas i enfacks- eller flerfacksverktyg ihop med våra keramiskt isolerade Heatlock Minifolds, standard varmkanalplattor som finns på lager för snabb leverans, eller med en konventionell varmkanalbalk.

more ▶

This Heatlock series, below, is currently being replaced by the A1-series of nozzles.
Before you design check availability, stock is gradually decreased.
Spare parts will be available until at least end of 2007 (apart form NPT1 bodies)

ESB1

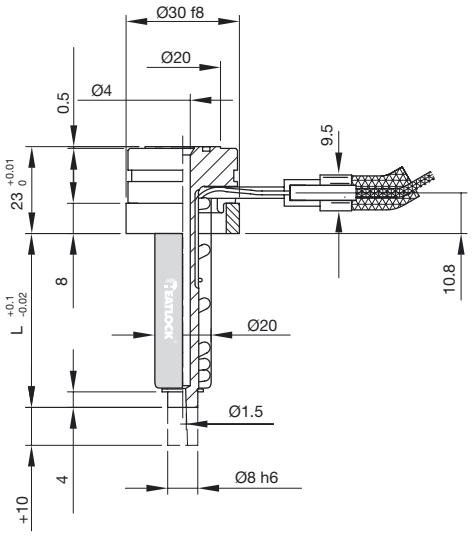

"L" mm	Part No.		Total volume of feed channel in mm³
	Single-cav.	Multi-cav.*	
26	ESB1026101	ESB1026102	561
26+10	ESB1026201	ESB1026202	579
36	ESB1036101	ESB1036102	687
36+10	ESB1036201	ESB1036202	705
46	ESB1046101	ESB1046102	813
46+10	ESB1046201	ESB1046202	830
86	ESB1086101	ESB1086102	1315
86+10	ESB1086201	ESB1086202	1333
106	ESB1106101	ESB1106102	1566
106+10	ESB1106201	ESB1106202	1584

* with O-ring 500 / 608

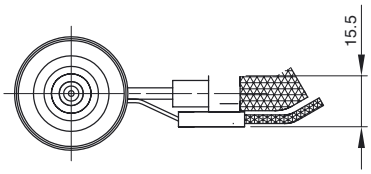

Can be controlled with various types of temperature controllers intended for hot runner systems with 220/240 V using thermocouple of type Fe-CuNi.

Recommended for the following maximum shot weights:	
Low-viscosity plastic (PS,PE,PP)	200g
Med.-viscosity plastic (ABS,SAN, PA,POM)	100g
High-viscosity plastic (PC,PMMA, Noryl, Filled material)	30g

Gate diameter is Ø1,5 mm on delivery, can be reamed up to Ø3 mm if needed. Please, look at page 9 regarding gate diameter.

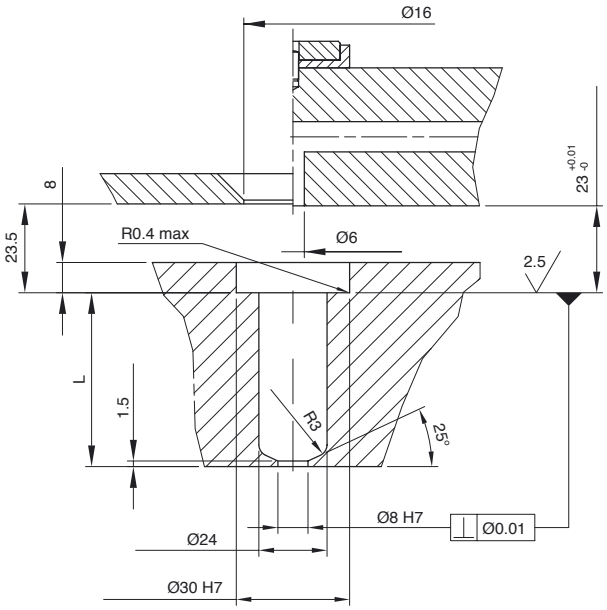

Length expansion at: °C="L"+X,xx						
°C	26	36	46	86	106	
200	0,06	0,08	0,11	0,20	0,24	
250	0,08	0,10	0,13	0,25	0,31	
300	0,09	0,12	0,16	0,30	0,37	
350	0,10	0,14	0,19	0,35	0,43	

To ensure minimum vestige on the part, measure the actual "L" measurement on each bush, add the length expansion according to the table to get the hole depth ("L"+X,xx) to be drilled in the cavity plate.

Före inbyggnad, mät upp bussningens nominella "L"-mått, lägg därefter till längdutvidgningen så att bussningens spets ligger exakt vid intagspunkten i uppvärmt tillstånd.

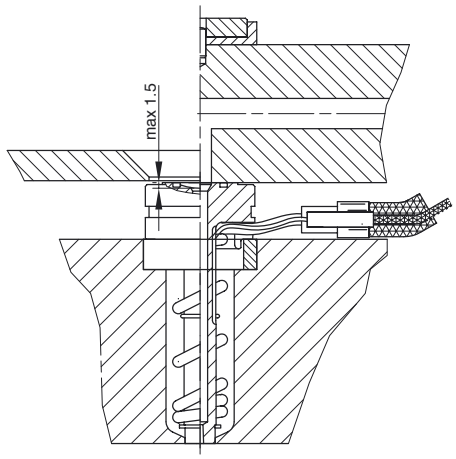

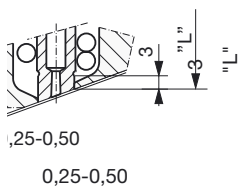	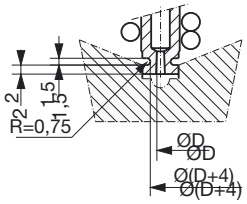
Gate on runner or on surface not perpendicular to bushing.	Increased temperature in the front end of the bush due to reduced heat loss.

more ▶

Date: 030928, © LKM Heatlock Co Ltd

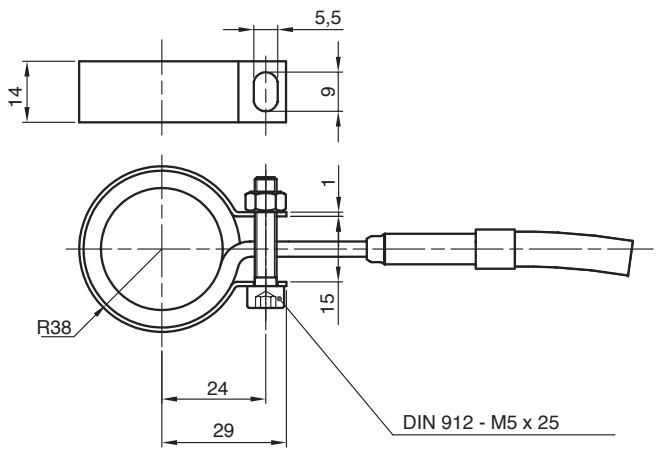

Part No.	Watt	Polarity
B028013180	180	black (red) +

When temperatures of 250-260°C and above are needed it may be advantegous to install a band heater at the back end. This is also the case when shear sensitive materials are to be molded.

Används när en jämn temperatur längs hela bussningen eftersträvas.

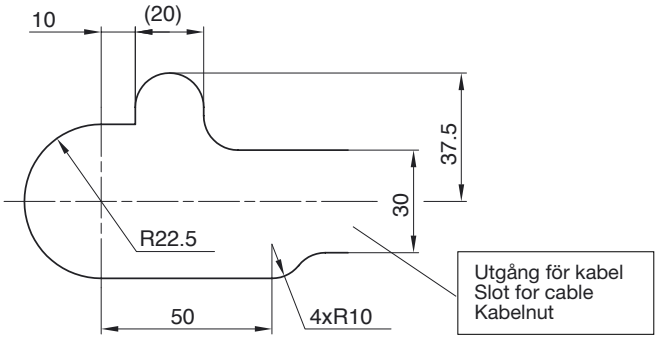

Cavity instructions for bushes with or without bandheater B055020180.

Håltagning för bussning med eller utan bandelement B055020180.

Prior to any assembly refer to our latest assembly instruction, always available on our web site www.heatlock.com

more ▶

This Heatlock series, below, is currently being replaced by the A1-series of nozzles.
Before you design check availability, stock is gradually decreased.
Spare parts will be available until at least end of 2007 (apart form NPT1 bodies)

ESB1

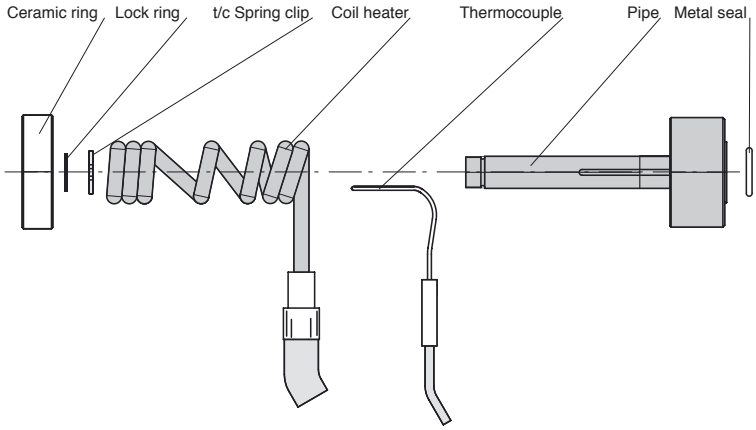

ESB1	Pipe	Coil heater	Thermo-couple	Reflector	*Metal seal	*Ceramic ring KEM...	*Ceramic ring	Lock ring	Spring clip
ESB1026101	ESBP102611	C080330125	TC00140195	–	–	KEM03002308		SGA0800000	ESBP198493
ESB1026102	ESBP102611	C080330125	TC00140195	–	ORING00608	KEM03002308	KEM030023081	SGA0800000	ESBP198493
ESB1026201	ESBP102621	C080330125	TC00140195	–	–	KEM03002308		SGA0800000	ESBP198493
ESB1026202	ESBP102621	C080330125	TC00140195	–	ORING00608	KEM03002308	KEM030023081	SGA0800000	ESBP198493
ESB1036101	ESBP103611	C080430125	TC00140195	–	–	KEM03002308		SGA0800000	ESBP198493
ESB1036102	ESBP103611	C080430125	TC00140195	–	ORING00608	KEM03002308	KEM030023081	SGA0800000	ESBP198493
ESB1036201	ESBP103621	C080430125	TC00140195	–	–	KEM03002308		SGA0800000	ESBP198493
ESB1036202	ESBP103621	C080430125	TC00140195	–	ORING00608	KEM03002308		SGA0800000	ESBP198493
ESB1046101	ESBP104611	C080530180	TC00140195	–	–	KEM03002308		SGA0800000	ESBP198493
ESB1046102	ESBP104611	C080530180	TC00140195	–	ORING00608	KEM03002308	KEM030023081	SGA0800000	ESBP198493
ESB1046201	ESBP104621	C080530180	TC00140195	–	–	KEM03002308		SGA0800000	ESBP198493
ESB1046202	ESBP104621	C080530180	TC00140195	–	ORING00608	KEM03002308		SGA0800000	ESBP198493
ESB1086101	ESBP108611	C080930240	TC00140210	–	–	KEM03002308		SGA0800000	ESBP198493
ESB1086102	ESBP108611	C080930240	TC00140210	–	ORING00608	KEM03002308		SGA0800000	ESBP198493
ESB1086201	ESBP108621	C080930240	TC00140210	–	–	KEM03002308		SGA0800000	ESBP198493
ESB1086202	ESBP108621	C080930240	TC00140210	–	ORING00608	KEM03002308		SGA0800000	ESBP198493
ESB1106101	ESBP110611	C081130280	TC00140210	–	–	KEM03002308		SGA0800000	ESBP198493
ESB1106102	ESBP110611	C081130280	TC00140210	–	ORING00608	KEM03002308		SGA0800000	ESBP198493
ESB1106201	ESBP110621	C081130280	TC00140210	–	–	KEM03002308		SGA0800000	ESBP198493
ESB1106202	ESBP110621	C081130280	TC00140210	–	ORING00608	KEM03002308		SGA0800000	ESBP198493

*) When you are to order spare part always check actual dimensions of the part needed:
The spare part list is what is presently supplied; always check our web site for latest information.

ORING00500	O.D.=12,70	I.D.= 9,56
ORING00608	O.D.=14,27	I.D.=11,10
KEM03002308	H=8	
KEM03002381	H=8,1	

*) Vid beställning av reservdelar, kontrollera alltid artikelns verkliga mått: Förteckningen visar vad som just nu levereras, för korrekt information kontrollera alltid uppgifterna på vår hemsida. Keramik och O-ringen varierar enligt nedan:

Date: 030928, © LKM Heatlock Co Ltd

Heatlock ESB2, Electric Sprue Bushing

Features

- Lowest possible thermal stress on the plastic
- Exceptionally uniform heat distribution along the sprue bushing.
- Ceramic insulation between bushing and mould.
- Low power consumption.

Egenskaper

- Utomordentligt jämn värmefördelning längs bussningen.
- Bussningen går att använda med i stort sett alla av dagens existerande material.
- Minsta möjliga termiska påkänning på plasten.
- Låg effektförbrukning.

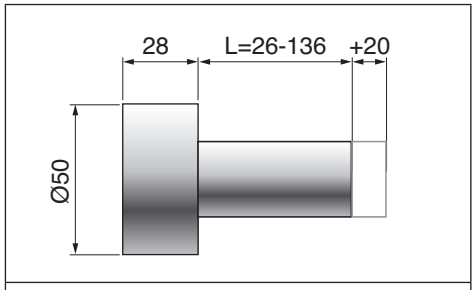

Shot weights <400 g

ESB2

electric sprue bush, has quite different technical properties and far lower price than you have been used to. Designed to eliminate cold sprues, making you more competitive.
HEATLOCK ESB2… is fully insulated from the mould with our special ceramic material, which only has 7% of the heat-conducting capacity of steel. The ceramic compression strength is 2100 N/mm^2 approx, and it is capable of withstanding temperatures of about 1400 °C.
The tube of the bushing is manufactured in a single piece from robust hot-worked steel that has been hardened to stand up to long and arduous service with high reliability.
The rugged longlife heater coil is asymmetrically wound to distribute the heat as uniformly as possible along the bushing.
The thermocouple is separate and measures the temperature in the middle of the tube.
All this makes the bushing reliable and suitable for materials that are sensitive to friction and are difficult to inject.
The bushing leaves a residue 4 to 6mm long, depending on the plastic used.
Can be used in a single cavity or multi-cavity version, together with our fully insulated Heatlock standard manifolds or a custom made conventional manifold that is ceramically insulated.

ESB2

är speciellt framtagen för att eliminera stångintaget och därigenom öka din konkurrenskraft. Största vikt har lagts vid enkelhet och driftsäkerhet för att ge dig en bussning som har lång livslängd till ett lågt pris.
Innerröret är gjort i ett enda stycke av ett varmarbetsstål som härdats för att hålla utan att ge upphov till läckage. Genom att röret är härdat kan även glasfyllda material sprutas.
Det robusta och hållbara spiralelementet är olikformigt lindat över bussningens längd för att ge så jämn värmefördelning som möjligt. Termoelementet som är separat mäter temperaturen på rörets mitt, där det är som varmast. Går något av elementen sönder behöver du bara byta det som är trasigt, något som du spar pengar på.
Bussningen är helt isolerad från formen med vårt speciella keramiska material som endast har 7% av stålets värmeledningsförmåga och har en tryckhållfasthet på 2100 N/mm^2.
Härigenom minskas värmeförlusterna ut till verktyget betydligt. Temperaturen i bussningen blir därigenom mycket jämn.
Allt detta gör bussningen lämplig för även mycket svårsprutade och friktionskänsliga material.
Bussningen lämnar en intagsrest på mellan 4-6mm. Skall en speciell profil bearbetas i framändan väljer man bussningen med extra längd +20mm. Kan användas i såväl enfacks- som flerfacksverktyg.

more ▶

This Heatlock series, below, is currently being replaced by the A1-series of nozzles.
Before you design check availability, stock is gradually decreased.
Spare parts will be available until at least end of 2007 (apart form NPT1 bodies)

ESB2

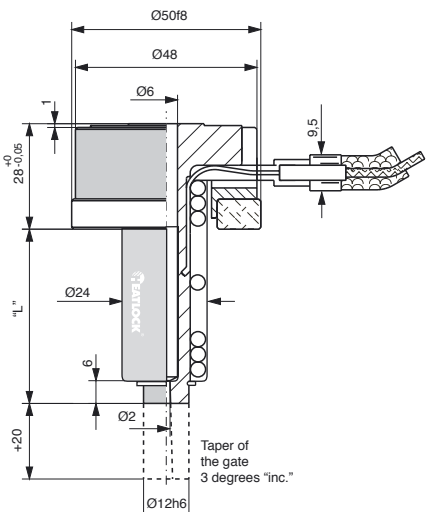

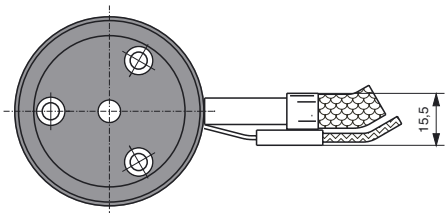

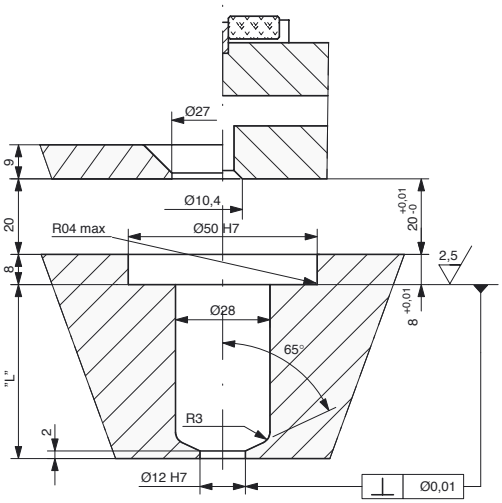

"L" mm	Part No.		Total volume of feed channel in mm³
	Single-cav.	Multi-cav.*	
26	ESB2026101	ESB2026102	1378
26+20	ESB2026201	ESB2026202	2006
46	ESB2046101	ESB2046102	1943
46+20	ESB2046201	ESB2046202	2572
66	ESB2066101	ESB2066102	2508
66+20	ESB2066201	ESB2066202	3137
86	ESB2086101	ESB2086102	3074
86+20	ESB2086201	ESB2086202	3702
106	ESB2106201	ESB2106102	3639
106+20	ESB2106201	ESB2106202	4267
136	ESB2136101	ESB2136102	4487
136+20	ESB2136201	ESB2136202	5115

* with O-ring 608

Can be controlled with various types of temperature controllers intended for hot runner systems with 220/240 V using thermocouple of type Fe-CuNi.

Recommended for the following maximum shot weights:	
Low-viscosity plastic (PS,PE,PP)	400g
Med.-viscosity plastic (ABS,SAN, PA,POM)	300g
High-viscosity plastic (PC,PMMA, Noryl, Filled material)	150g

Gate diameter is Ø2 mm on delivery, can be reamed up to Ø5 mm if needed. Please, look at page 9 regarding gate diameter.

Length expansion at: °C="L"+X,xx						
°C	26	46	66	86	106	136
200	0,06	0,11	0,15	0,20	0,24	0,31
250	0,07	0,13	0,19	0,25	0,30	0,40
300	0,09	0,16	0,23	0,30	0,37	0,47
350	0,10	0,19	0,27	0,35	0,43	0,55

To ensure minimum vestige on the part, measure the actual "L" measurement on each bush, add the length expansion according to the table to get the hole depth ("L"+X,xx) to be drilled in the cavity plate.

Före inbyggnad, mät upp bussningens nominella "L"-mått, lägg därefter till längdutvidgningen så att bussningens spets ligger exakt vid intagspunkten i uppvärmt tillstånd.

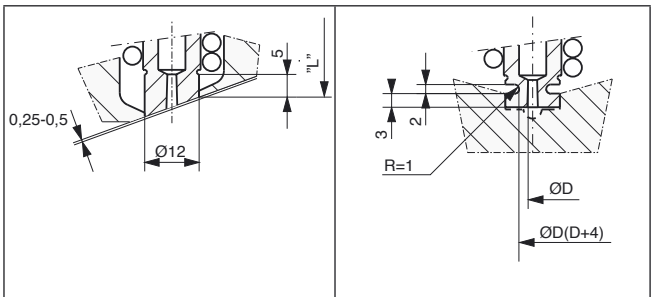

Gate on runner or on surface not perpendicular to bushing.	Increased temperature in the front end of the bush due to reduced heat loss.

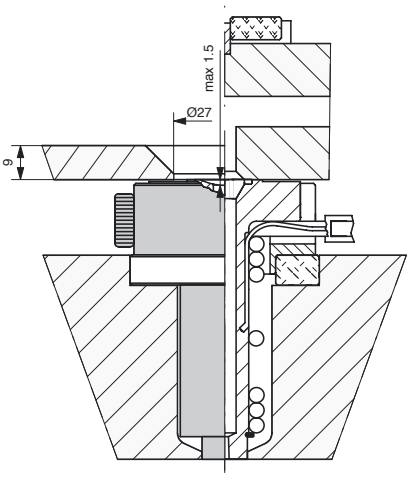

more ▶

Date: 030928, © LKM Heatlock Co Ltd

B048020180

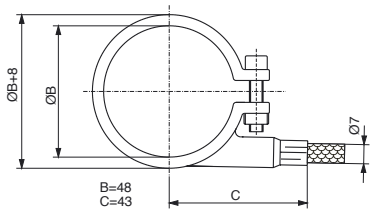

B047015315

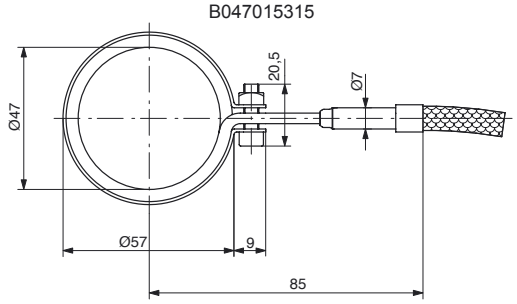

Part No.	Watt	Polarity
B048020180	180	no t/c
B047015315	315	black (red) +

When temperatures of 250-260°C and above are needed it may be advantegous to install a band heater at the back end. This is also the case when shear sensitive materials are to be molded.

Används när en jämn temperatur längs hela bussningen eftersträvas.

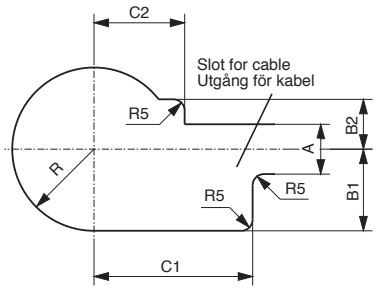

Part No.	R	A	B1	B2	C1	C2
Bush	28	20	-	-	-	-
B047015315	36	22	15	22	45	45
B048020180	36	22	36	22	70	40

Cavity instructions for bushes with or without bandheater B047015315/B048020180.

Håltagning för bussning med eller utan bandelement B047015315/B048020180.

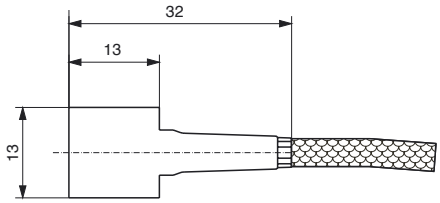

Part No.	Polarity
TC00240000	Black (red) +

Thermocouple used between bandheaters and sprue bush. Measures temperatures up to +400°C. The blade is made of copper and can be contoured to various shapes.

Termogivare för användning mellan bandelement och bussning. Mäter temperaturer upp till +400°C. Bladet är gjort av koppar och kan bearbetas till olika former.

Prior to any assembly refer to our latest assembly instruction, always available on our web site www.heatlock.com

more ▶

This Heatlock series, below, is currently being replaced by the A1-series of nozzles.
Before you design check availability, stock is gradually decreased.
Spare parts will be available until at least end of 2007 (apart form NPT1 bodies)

ESB2

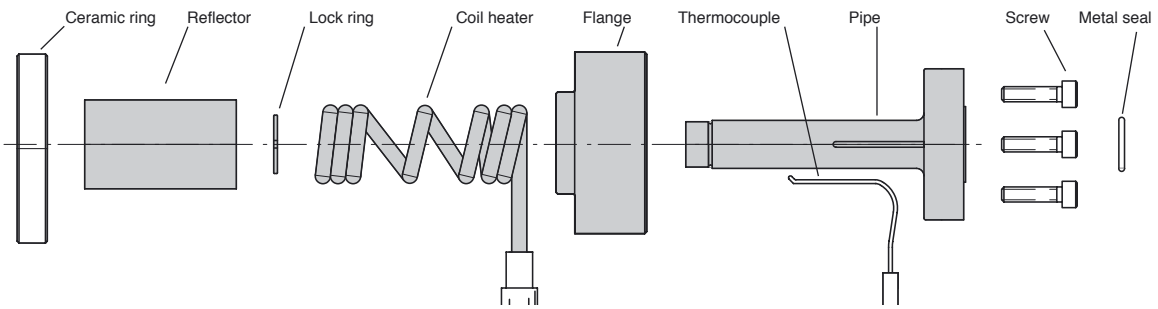

ESB2	Pipe	Coil heater	Thermo-couple	Reflector	Metal Seal	Flange	Ceramic ring	Screw 3 pcs.	Lock ring
ESB2026101	ESBP202611	C120360200	TC00140195	ESBP202605	–	ESBP298210	KE05002708	MC6S04X012	SGA1200000
ESB2026102	ESBP202612	C120360200	TC00140195	ESBP202605	ORING00608	ESBP298210	KE05002708	MC6S04X012	SGA1200000
ESB2026201	ESBP202621	C120360200	TC00140195	ESBP202605	–	ESBP298210	KE05002708	MC6S04X012	SGA1200000
ESB2026202	ESBP202622	C120360200	TC00140195	ESBP202605	ORING00608	ESBP298210	KE05002708	MC6S04X012	SGA1200000
ESB2046101	ESBP204611	C120560315	TC00140200	ESBP204605	–	ESBP298210	KE05002708	MC6S04X012	SGA1200000
ESB2046102	ESBP204612	C120560315	TC00140200	ESBP204605	ORING00608	ESBP298210	KE05002708	MC6S04X012	SGA1200000
ESB2046201	ESBP204621	C120560315	TC00140200	ESBP204605	–	ESBP298210	KE05002708	MC6S04X012	SGA1200000
ESB2046202	ESBP204622	C120560315	TC00140200	ESBP204605	ORING00608	ESBP298210	KE05002708	MC6S04X012	SGA1200000
ESB2066101	ESBP206611	C120760400	TC00140200	ESBP206605	–	ESBP298210	KE05002708	MC6S04X012	SGA1200000
ESB2066102	ESBP206612	C120760400	TC00140200	ESBP206605	ORING00608	ESBP298210	KE05002708	MC6S04X012	SGA1200000
ESB2066201	ESBP206621	C120760400	TC00140200	ESBP206605	–	ESBP298210	KE05002708	MC6S04X012	SGA1200000
ESB2066202	ESBP206622	C120760400	TC00140200	ESBP206605	ORING00608	ESBP298210	KE05002708	MC6S04X012	SGA1200000
ESB2086101	ESBP208611	C120960400	TC00140210	ESBP208605	–	ESBP298210	KE05002708	MC6S04X012	SGA1200000
ESB2086102	ESBP208612	C120960400	TC00140210	ESBP208605	ORING00608	ESBP298210	KE05002708	MC6S04X012	SGA1200000
ESB2086201	ESBP208621	C120960400	TC00140210	ESBP208605	–	ESBP298210	KE05002708	MC6S04X012	SGA1200000
ESB2086202	ESBP208622	C120960400	TC00140210	ESBP208605	ORING00608	ESBP298210	KE05002708	MC6S04X012	SGA1200000
ESB2106101	ESBP210611	C121160500	TC00140210	ESBP210605	–	ESBP298210	KE05002708	MC6S04X012	SGA1200000
ESB2106102	ESBP210612	C121160500	TC00140210	ESBP210605	ORING00608	ESBP298210	KE05002708	MC6S04X012	SGA1200000
ESB2106201	ESBP210621	C121160500	TC00140210	ESBP210605	–	ESBP298210	KE05002708	MC6S04X012	SGA1200000
ESB2106202	ESBP210622	C121160500	TC00140210	ESBP210605	ORING00608	ESBP298210	KE05002708	MC6S04X012	SGA1200000
ESB2136101	ESBP213611	C121460500	TC00140220	ESBP213605	–	ESBP298210	KE05002708	MC6S04X012	SGA1200000
ESB2136102	ESBP213612	C121460500	TC00140220	ESBP213605	ORING00608	ESBP298210	KE05002708	MC6S04X012	SGA1200000
ESB2136201	ESBP213621	C121460500	TC00140220	ESBP213605	–	ESBP298210	KE05002708	MC6S04X012	SGA1200000
ESB2136202	ESBP213622	C121460500	TC00140220	ESBP213605	ORING00608	ESBP298210	KE05002708	MC6S04X012	SGA1200000

Date: 030928, © LKM Heatlock Co Ltd

Heatlock ESB3, Electric sprue bushing

Features

- Lowest possible thermal stress on the plastic.
- Exceptionally uniform heat distribution along the sprue bushing.
- Ceramic insulation between bushing and mould.
- Low power consumption.

Egenskaper

- Bussningen går att använda med i stort sett alla av dagens existerande material.
- Utomordentligt jämn värmefördelning längs bussningen.
- Keramisk isolering
- Låg energiförbrukning

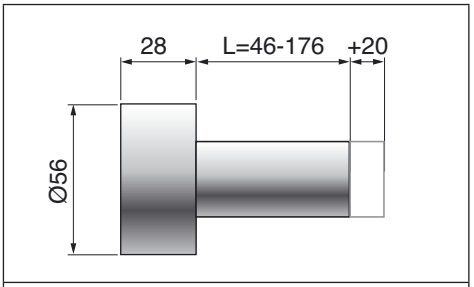

Shot weights <2000 g

ESB3

electric sprue bush, has quite different technical properties and far lower price than you have been used to. Designed to eliminate cold sprues, making you more competitive.
ESB3 is fully insulated from the mould with our special ceramic material, which only has 7% of the heat-conducting capacity of steel. The ceramic compression strength is 2100 N/mm^2 approx, and it is capable of withstanding temperatures of about 1400 °C.
The tube of the bushing is manufactured from robust hot-worked steel that has been hardened to stand up to long and arduous service with high reliability. The rugged longlife heater coil is asymmetrically wound to distribute the heat as uniformly as possible along the bushing.
The thermocouple is separate and measures the temperature in the middle of the tube.
All this makes the bushing reliable and suitable for materials that are sensitive to friction and are difficult to inject.
The bushing leaves a residue 6 to 8mm long, depending on the plastic used.
Can be used in a single cavity or multi-cavity version, together with our fully insulated Heatlock standard manifolds or a custom made conventional manifold that is ceramically insulated.

ESB3

är speciellt framtagen för att eliminera stångintaget och därigenom öka din konkurrenskraft. Största vikt har lagts vid enkelhet och driftsäkerhet för att ge dig en bussning som har lång livslängd till ett lågt pris.
Innerröret är gjort i ett enda stycke av ett varmarbetsstål som härdats för att hålla utan att ge upphov till läckage. Genom att röret är härdat kan även glasfyllda material sprutas.
Det robusta och hållbara spiralelementet är olikformigt lindat över bussningens längd för att ge så jämn värmefördelning som möjligt. Termoelementet som är separat mäter temperaturen på rörets mitt, där det är som varmast. Går något av elementen sönder behöver du bara byta det som är trasigt, något som du spar pengar på.
Bussningen är helt isolerad från formen med vårt speciella keramiska material som endast har 7% av stålets värmeledningsförmåga och har en tryckhållfasthet på 2100 N/mm^2.
Härigenom minskas värmeförlusterna ut till verktyget betydligt. Temperaturen i bussningen blir därigenom mycket jämn. Allt detta gör bussningen lämplig för även mycket svårsprutade och friktionskänsliga material.
Bussningen lämnar en intagsrest på mellan 4-6mm. Skall en speciell profil bearbetas i framändan väljer man bussningen med extra längd +20mm.
Kan användas i såväl enfacks- som flerfacksverktyg.

more ▶

This Heatlock series, below, is currently being replaced by the A1-series of nozzles.
Before you design check availability, stock is gradually decreased.
Spare parts will be available until at least end of 2007 (apart form NPT1 bodies)

ESB3

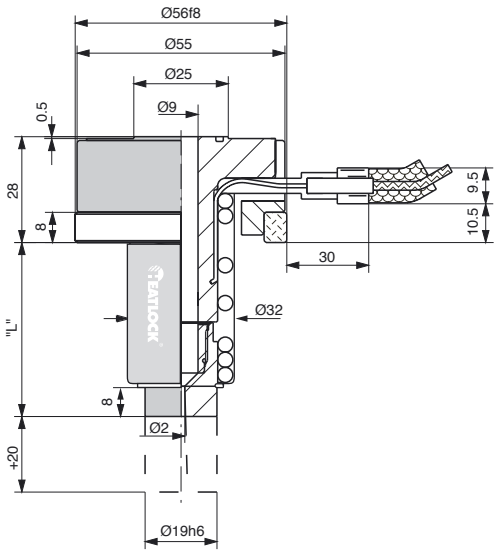

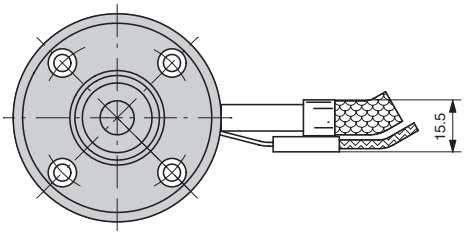

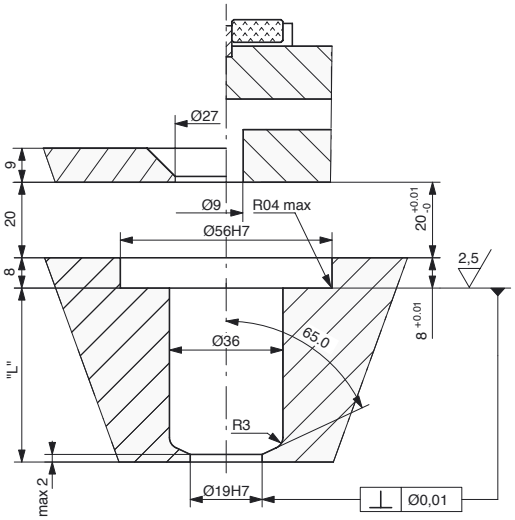

"L" mm	Part No.		Total volume of feed channel in mm³
	Single-cav.	Multi-cav.*	
46	ESB3046101	ESB3046102	4093
46+20	ESB3046201	ESB3046202	4156
66	ESB3066101	ESB3066102	5365
66+20	ESB3066201	ESB3066202	5428
86	ESB3086101	ESB3086102	6637
86+20	ESB3086201	ESB3086202	6700
116	ESB3116101	ESB3116102	8544
116+20	ESB3116201	ESB3116202	8607
146	ESB3146101	ESB3146102	10452
146+20	ESB3146201	ESB3146202	10515
176	ESB3176101	ESB3176102	12360
176+20	ESB3176201	ESB3176202	12422

* with O-ring 630

Can be controlled with various types of temperature controllers intended for hot runner systems with 220/240 V using thermocouple of type Fe-CuNi.

Recommended for the following maximum shot weights:	
Low-viscosity plastic (PS,PE,PP)	2000g
Med.-viscosity plastic (ABS,SAN, PA,POM)	1400g
High-viscosity plastic (PC,PMMA, Noryl, Filled material)	700g

Gate diameter is 2 mm on delivery, can be reamed up to 6 mm if needed.

Length expansion at: °C="L"+X,xx						
°C	46	66	86	116	146	176
200	0,11	0,15	0,20	0,27	0,34	0,40
250	0,13	0,19	0,25	0,33	0,42	0,51
300	0,16	0,23	0,30	0,40	0,50	0,61
350	0,19	0,27	0,35	0,47	0,59	0,71

To ensure minimum vestige on the part, measure the actual "L" measurement on each bush, add the length expansion according to the table to get the hole depth ("L"+X,xx) to be drilled in the cavity plate.

Före inbyggnad, mät upp bussningens nominella "L"-mått, lägg därefter till längdutvidgningen så att bussningens spets ligger exakt vid intagspunkten i uppvärmt tillstånd.

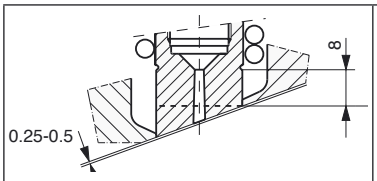

Gate on runner or on surface not perpendicular to bushing.

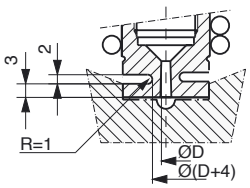

Increased temperature in the front end of the bush due to reduced heat loss.

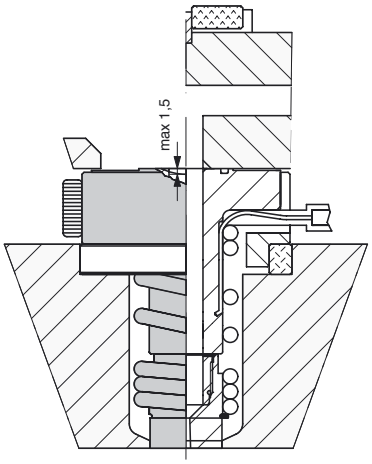

more ▶

Date: 030930, © LKM Heatlock Co Ltd

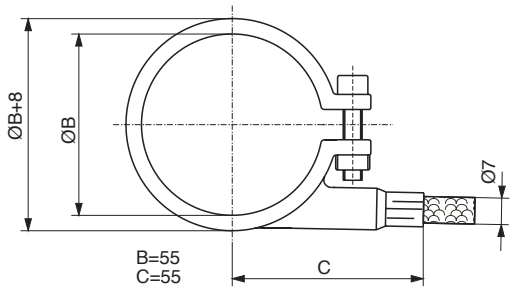

Part No.	Watt	Polarity
B055020180	180	no t/c

When temperatures of 250-260°C and above are needed it may be advantegous to install a band heater at the back end together with thermocouple (TC00240000). This is also the case when shear sensitive materials are to be molded.

Används när en jämn temperatur längs hela bussningen eftersträvas. Då tillsammans med ett termoelement (TC00240000).

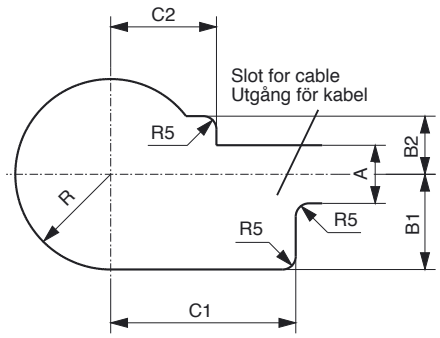

Part No.	R	A	B1	B2	C1	C2
Bush	28	22	-	-	-	-
B055020180	40	22	42	22	85	45

Cavity instructions for bushes with or without bandheater B055020180.

Håltagning för bussning med eller utan bandelement B055020180.

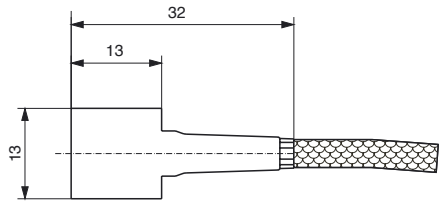

Part No.	Polarity
TC00240000	Black (red) +

Thermocouple used between bandheaters and sprue bush. Measures temperatures up to +400°C. The blade is made of copper and can be contoured to various shapes.

Termogivare för användning mellan bandelement och bussning. Mäter temperaturer upp till +400°C. Bladet är gjort av koppar och kan bearbetas till olika former.

Prior to any assembly refer to our latest assembly instruction, always available on our web site www.heatlock.com

more ▶

This Heatlock series, below, is currently being replaced by the A1-series of nozzles.
Before you design check availability, stock is gradually decreased.
Spare parts will be available until at least end of 2007 (apart form NPT1 bodies)

ESB3

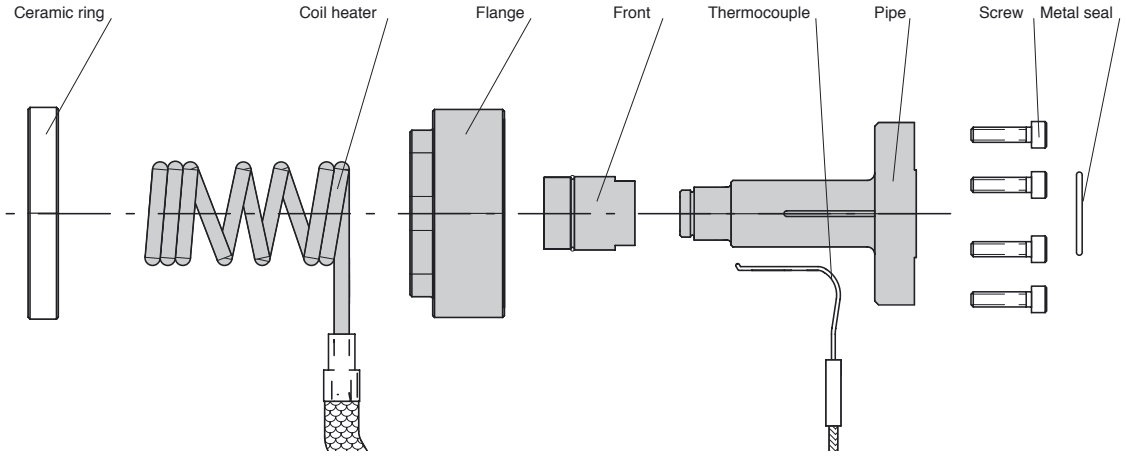

ESB3	Pipe	Coil heater	Thermo-couple	Front ESB3	Metal seal	Flange	Ceramic ring	Srew 4 pcs.	Lock ring
ESB3046101	SBBP304630	C190550335	TC00140200	ESBF30010	–	ESBP398210	KEM05604408	MC6S04X012	SGA1900000
ESB3046102	SBBP304630	C190550335	TC00140200	ESBF30010	ORING00630	ESBP398210	KEM05604408	MC6S04X012	SGA1900000
ESB3046201	SBBP304630	C190550335	TC00140200	ESBF30020	–	ESBP398210	KEM05604408	MC6S04X012	SGA1900000
ESB3046202	SBBP304630	C190550335	TC00140200	ESBF30020	ORING00630	ESBP398210	KEM05604408	MC6S04X012	SGA1900000
ESB3066101	SBBP306630	C190750335	TC00140210	ESBF30010	–	ESBP398210	KEM05604408	MC6S04X012	SGA1900000
ESB3066102	SBBP306630	C190750335	TC00140210	ESBF30010	ORING00630	ESBP398210	KEM05604408	MC6S04X012	SGA1900000
ESB3066201	SBBP306630	C190750335	TC00140210	ESBF30020	–	ESBP398210	KEM05604408	MC6S04X012	SGA1900000
ESB3066202	SBBP306630	C190750335	TC00140210	ESBF30020	ORING00630	ESBP398210	KEM05604408	MC6S04X012	SGA1900000
ESB3086101	SBBP308630	C190950560	TC00140210	ESBF30010	–	ESBP398210	KEM05604408	MC6S04X012	SGA1900000
ESB3086102	SBBP308630	C190950560	TC00140210	ESBF30010	ORING00630	ESBP398210	KEM05604408	MC6S04X012	SGA1900000
ESB3086201	SBBP308630	C190950560	TC00140210	ESBF30020	–	ESBP398210	KEM05604408	MC6S04X012	SGA1900000
ESB3086202	SBBP308630	C190950560	TC00140210	ESBF30020	ORING00630	ESBP398210	KEM05604408	MC6S04X012	SGA1900000
ESB3116101	SBBP311630	C191250560	TC00140220	ESBF30010	–	ESBP398210	KEM05604408	MC6S04X012	SGA1900000
ESB3116102	SBBP311630	C191250560	TC00140220	ESBF30010	ORING00630	ESBP398210	KEM05604408	MC6S04X012	SGA1900000
ESB3116201	SBBP311630	C191250560	TC00140220	ESBF30020	–	ESBP398210	KEM05604408	MC6S04X012	SGA1900000
ESB3116202	SBBP311630	C191250560	TC00140220	ESBF30020	ORING00630	ESBP398210	KEM05604408	MC6S04X012	SGA1900000
ESB3146101	SBBP314630	C191550835	TC00140230	ESBF30010	–	ESBP398210	KEM05604408	MC6S04X012	SGA1900000
ESB3146102	SBBP314630	C191550835	TC00140230	ESBF30010	ORING00630	ESBP398210	KEM05604408	MC6S04X012	SGA1900000
ESB3146201	SBBP314630	C191550835	TC00140230	ESBF30020	–	ESBP398210	KEM05604408	MC6S04X012	SGA1900000
ESB3146202	SBBP314630	C191550835	TC00140230	ESBF30020	ORING00630	ESBP398210	KEM05604408	MC6S04X012	SGA1900000
ESB3176101	SBBP317630	C191850835	TC00140250	ESBF30010	–	ESBP398210	KEM05604408	MC6S04X012	SGA1900000
ESB3176102	SBBP317630	C191850835	TC00140250	ESBF30010	ORING00630	ESBP398210	KEM05604408	MC6S04X012	SGA1900000
ESB3176201	SBBP317630	C191850835	TC00140250	ESBF30020	–	ESBP398210	KEM05604408	MC6S04X012	SGA1900000
ESB3176202	SBBP317630	C191850835	TC00140250	ESBF30020	ORING00630	ESBP398210	KEM05604408	MC6S04X012	SGA1900000

Date: 030930, © LKM Heatlock Co Ltd

Heatlock ESB4 & ESB4...Vario, sprue bushing

Features

- Lowest possible thermal stress on plastics.
- Flow channel can be made to your own requirements. Tailor-made installation dim."L".
- Ceramic insulation between bushing and mould.
- Production of large parts using optimum technical items. The economical advantages of doing away with heavy sprues.

Egenskaper

- Den stora innerdiametern ger minsta möjliga termiska påkänning på plasten.
- Vario kan anpassas helt efter dina behov när det gäller längd, flytkanalens diameter eller intagsprofil.
- Utomordentligt jämn värmefördelning längs bussningen.
- Tekniskt optimal produktion av stora detaljer och ekonomiska fördelar som eliminering av grova stångingöt medför.

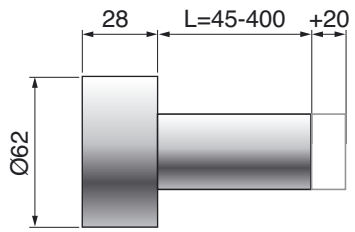

Shot weights <4500 g

ESB4

is made of one piece Swedish hot worked steel, hardened for better strength and long life, it withstands an injection pressure up to 1800 bar. Produced from solid steel making it absolutely leak free.
The Vario bush can be produced to your exact needs.
You can choose the flowchannel, installation length and gate diameter that you require. Gate types to choose from is the standard reliable ESB-version that gives you a residue of 6-10mm, if you require a smaller residue you can order the bush wih either Pin Point or Needle Point type of gate.
The bush is fully inslulated from the mould using our special ceramic material, which only has 7% of the heat-conducting capacity of steel. The ceramic compression strength is 2100 N/mm^2 approx, and it is capable of withstanding temperatures of about 1400 °C.
The special design of the heat supply with the ceramic insulation, produces uniform heat along the bushing.
All this makes the bushing reliable and suitable for materials that are sensitive to friction and are difficult to inject.
Can be used with Heatlock custom made conventional manifold that is ceramically insulated.

ESB4

är konstruerad efter samma koncept som den lilla modellen.
Vi har genom att, på 8000XL VARIO, inte förutbestämma vilka längder eller vilken flytkanal som gäller fått en bussning som kan skräddarsys exakt efter dina behov, med mycket kort leveranstid och till ett mycket attraktivt pris. Vario kan levereras i vårt standard utförande som ger en intagstapp för maximal driftsäkerhet eller med en punktintagsprofil som ger en mindre intagsrest.
Bussningen är gjord i ett enda stycke av svenskt varmarbetsstål som härdats för bättre styrka och driftsäkerhet. Tål ett insprutningstryck upp till 1800 bar.
Keramiskt isolerad från formen med vårt speciella material som endast har 7% värmeledningsförmåga jämfört med stål.
Olikformig lindning på det robusta spiralelementet för att ge en så jämn värmefördelning som möjligt. Termoelementet som är separat har sin mätpunkt mitt på röret, där det är som varmast.
Allt detta tillsammans med den stora diametern på flytkanalen gör bussningen mycket lämplig för material som är friktionskänsliga och svåra att spruta.
Går något av elementen sönder behöver du bara köpa det som gått sönder, något som du spar pengar på.
Kan användas i såväl enfacks- som flerfacksverktyg, då ihop med en konventionell varmkanalbalk som även den isolerats keramiskt.

more ▶

This Heatlock series, below, is currently being replaced by the A1-series of nozzles.
Before you design check availability, stock is gradually decreased.
Spare parts will be available until at least end of 2007 (apart form NPT1 bodies)

ESB4

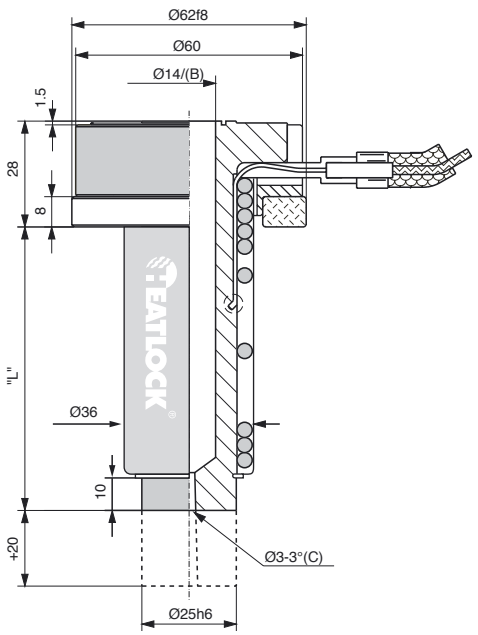

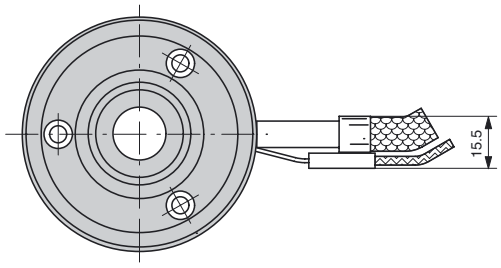

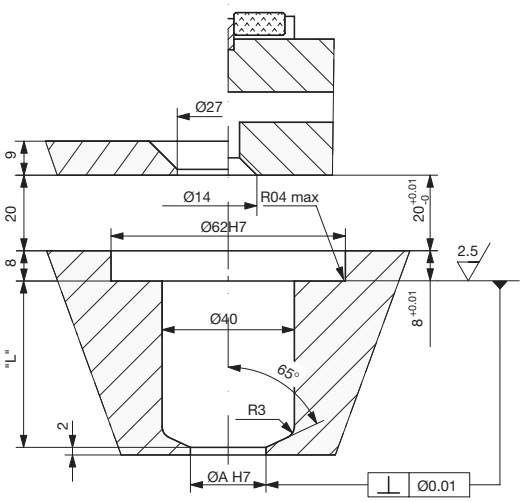

"L" mm	Part No.		Total volume of feed channel in mm³
	Single-cav.	Multi-cav.*	
75+20	ESB4075201	ESB4075202	14279
100+20	ESB4100201	ESB4100202	18126
125+20	ESB4125201	ESB4125202	21972
150+20	ESB4150201	ESB4150202	25819
175+20	ESB4175201	ESB4175202	29665
200+20	ESB4200201	ESB4200202	33512

* with O-ring 615. Later version with O-ring 640.

Can be controlled with various types of temperature controllers intended for hot runner systems with 220/240 V using thermocouple of type Fe-CuNi.

Recommended for the following maximum shot weights:	
Low-viscosity plastic (PS,PE,PP)	4500g
Med.-viscosity plastic (ABS,SAN, PA,POM)	2800g
High-viscosity plastic (PC,PMMA, Noryl, Filled material)	1700g

Gate diameter is 3 mm on delivery, can be reamed up to 12 mm if needed.

Length expansion at: °C="L"+X,xx

°C	50	75	100	125	150	175	200
200	0,12	0,17	0,23	0,29	0,34	0,40	0,46
250	0,14	0,22	0,29	0,36	0,43	0,50	0,58
300	0,17	0,26	0,34	0,43	0,52	0,60	0,69
350	0,20	0,30	0,40	0,50	0,60	0,70	0,80

To ensure minimum vestige on the part, measure the actual "L" measurement on each bush, add the length expansion according to the table to get the hole depth ("L"+X,xx) to be drilled in the cavity plate.

Före inbyggnad, mät upp bussningens nominella "L"-mått, lägg därefter till längdutvidgningen så att bussningens spets ligger exakt vid intagspunkten i uppvärmt tillstånd.

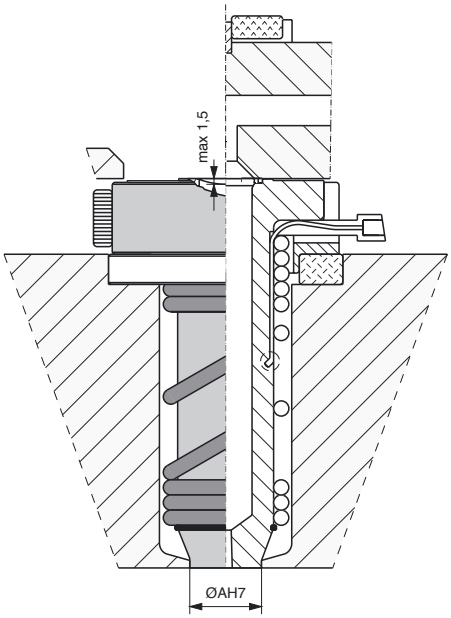

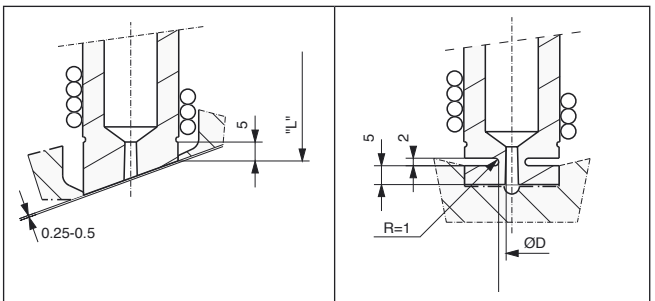

Gate on runner or on surface not perpendicular to bushing.	Increased temperature in the front end of the bush due to reduced heat loss.

more ▶

Date: 030930, © LKM Heatlock Co Ltd

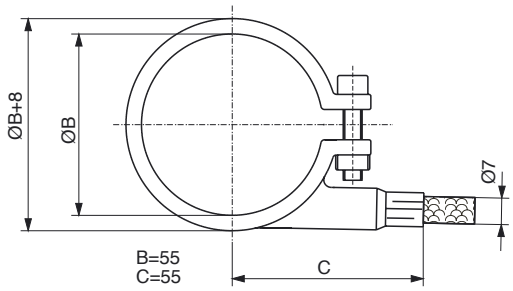

Part No.	Watt	Polarity
B060020180	180	no t/c

When temperatures of 250-260°C and above are needed it may be advantegous to install a band heater at the back end together with thermocouple (TC00240000). This is also the case when shear sensitive materials are to be molded.

Används när en jämn temperatur längs hela bussningen eftersträvas. Då tillsammans med ett termoelement (TC00240000).

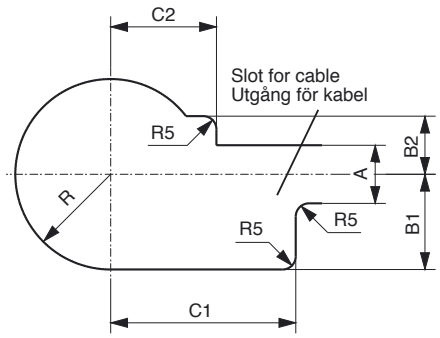

Part No.	R	A	B1	B2	C1	C2
Bush	34	20	-	-	-	-
B060020180	42	22	42	22	85	45

Cavity instructions for bushes with or without bandheater B060020180.

Håltagning för bussning med eller utan bandelement B060020180.

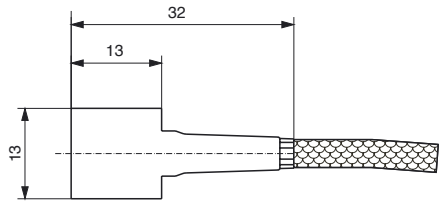

Part No.	Polarity
TC00240000	Black (red) +

Thermocouple used between bandheaters and sprue bush. Measures temperatures up to +400°C. The blade is made of copper and can be contoured to various shapes.

Termogivare för användning mellan bandelement och bussning. Mäter temperaturer upp till +400°C. Bladet är gjort av koppar och kan bearbetas till olika former.

Prior to any assembly refer to our latest assembly instruction, always available on our web site www.heatlock.com

more ▶

ESB4...Vario

Different examples of ESB4...Vario. Can be made according to your request.

Olika exempel på ESB4...Vario. Kan tillverkas enligt Dina önskemål

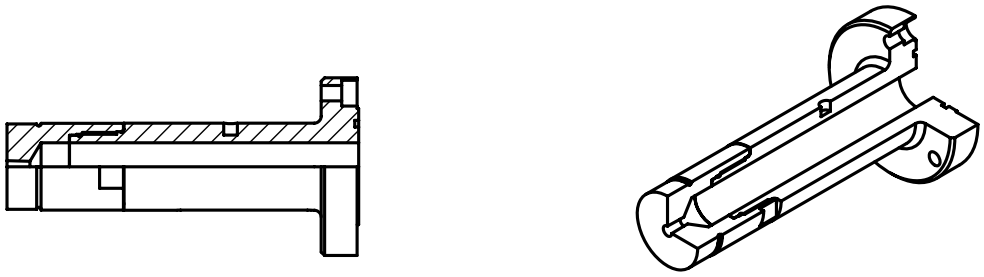

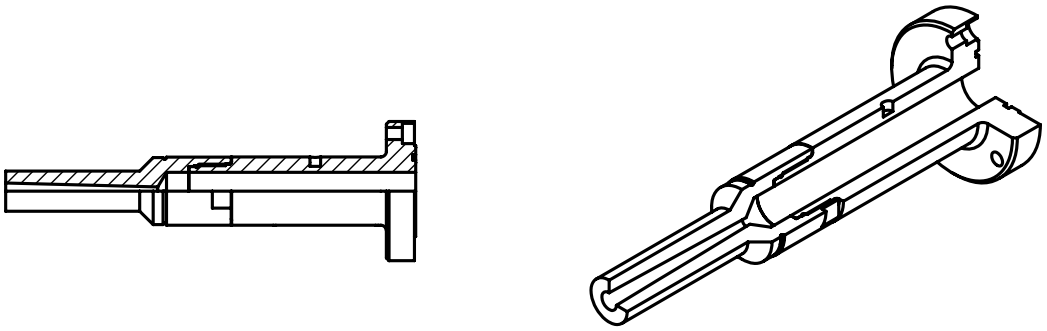

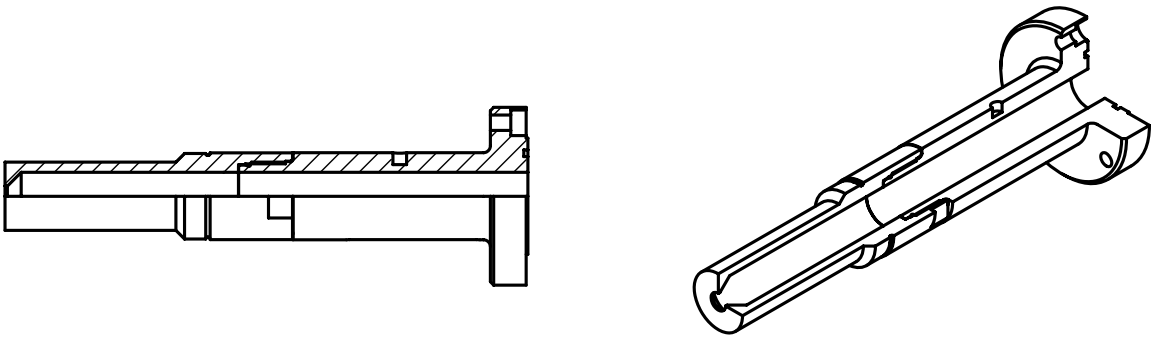

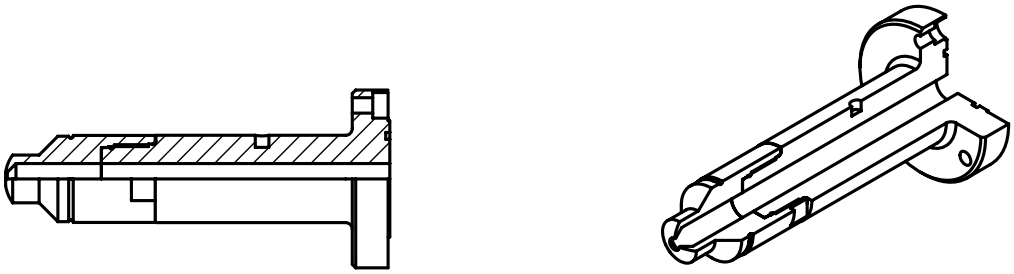

Date: 030930, © LKM Heatlock Co Ltd

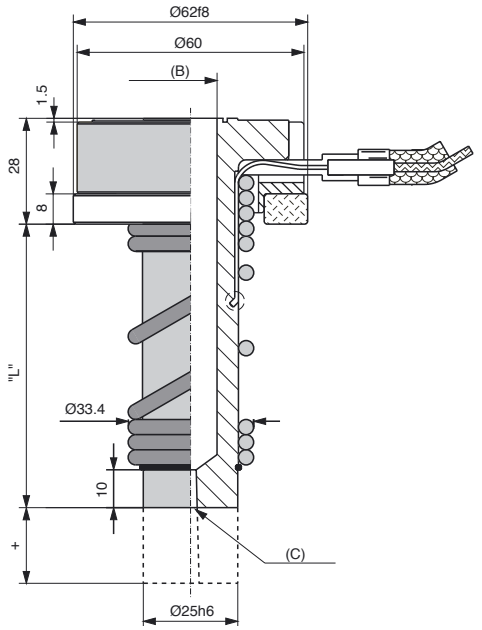

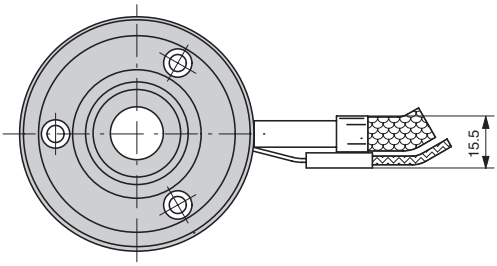

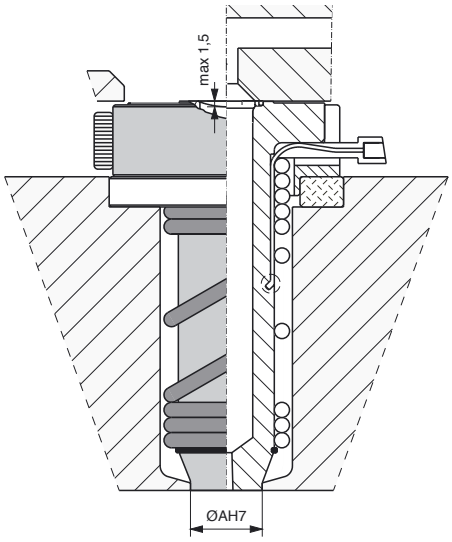

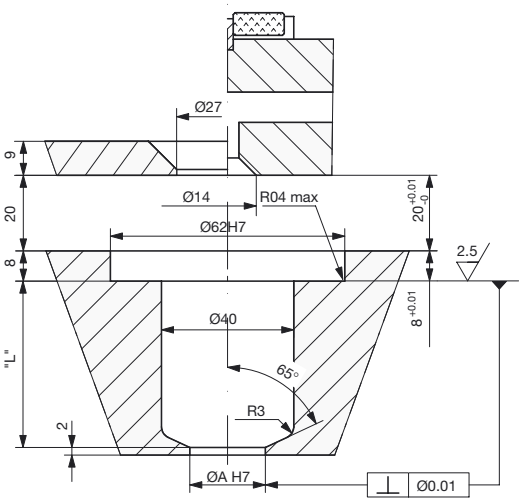

ESB4... Vario

The tailor made gate bushing which you adapt to exactly match your tool. You determine the "L"-size (45-400mm), flow channel diameter, gate diameter and gate type. You can have the bushing as gate bushing, point or needle-point type. Ideal for large tools which need a balanced hot runner system. Delivery time is approx. 3 weeks.

Den skräddarsydda ingötsbussningen som Du exakt anpassar till Ditt verktyg. Du bestämmer själv "L"-måttet (45-400mm), flytkanalens diameter, intagets diameter och intagets typ. Du kan få bussningen som ingötsbussning, i punktintags- eller needlepoints-utförande. Idealet för stora verktyg som behöver balanserade hetkanalsystem. Leveranstiden är c:a 3 veckor.

Art. Nr.	Description
ESB4300201	Bushing Vario, L=45-300
ESB43500201	Bushing Vario, L=350
Modification	
ESBP4PP	Pin Point gating type
ESBP4NP	Needle Points gating
ESBP4RADIE	Back radius/cone
ESBP4HRC	Front local hardening
ESBP4ORING	O-ring groove
NPBP430040	Needle
NPBP430043	Needle TIN-coated

Serie ESB4...Vario	
Description	**Choose**
"L"	(45-400) mm
B	(8-14) mm
C	(2-12) mm
Type	(S/PP/NP)*
Else	
* S=standard, PP=Pin Point, NP=Needle Point	

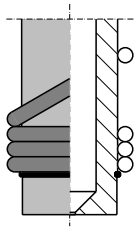	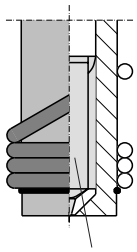 Needle NPBP430040
Pin Point gating Type=PP	Needle Point gating Type=NP
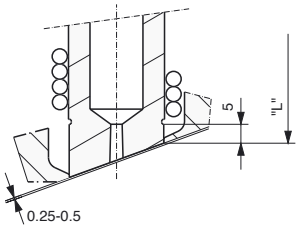	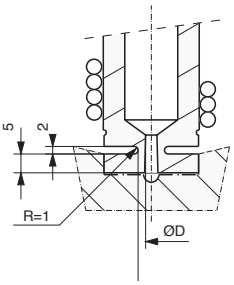
Gate on runner or on surface not perpendicular to bushing.	Increased temperature in the front end of the bush due to reduced heat loss.

This Heatlock series, below, is currently being replaced by the A1-series of nozzles.
Before you design check availability, stock is gradually decreased.
Spare parts will be available until at least end of 2007 (apart form NPT1 bodies)

ESB4

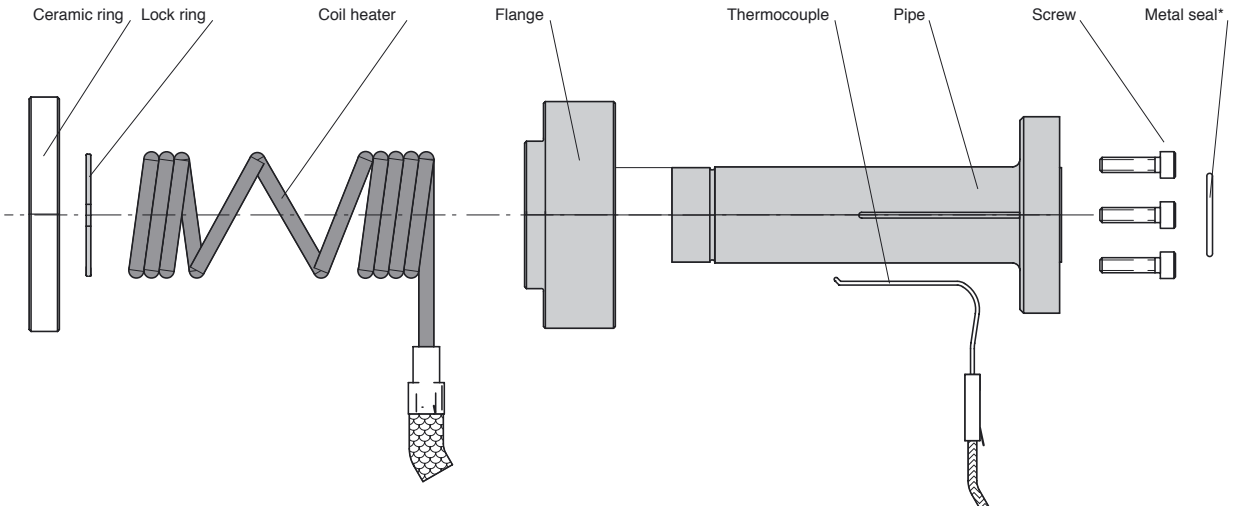

ESB4	Pipe	Coil heater	Thermo-couple	Reflector	Metal seal	Flange	Ceramic ring	Srew 3 pcs.	Lock ring
ESB4075201	ESBP407521	C250800630	TC00140210	–		ESBP498310	KE06003908	MC6S04X012	SGA2500000
ESB4075202	ESBP407521	C250800630	TC00140210	–	ORING00640	ESBP498310	KE06003908	MC6S04X012	SGA2500000
ESB4100201	ESBP410021	C250800630	TC00140210	–		ESBP498310	KE06003908	MC6S04X012	SGA2500000
ESB4100202	ESBP410021	C250800630	TC00140210	–	ORING00640	ESBP498310	KE06003908	MC6S04X012	SGA2500000
ESB4125201	ESBP412521	C251300790	TC00140220	–		ESBP498310	KE06003908	MC6S04X012	SGA2500000
ESB4125202	ESBP412521	C251300790	TC00140220	–	ORING00640	ESBP498310	KE06003908	MC6S04X012	SGA2500000
ESB4150201	ESBP415021	C251550790	TC00140230	-		ESBP498310	KE06003908	MC6S04X012	SGA2500000
ESB4150202	ESBP415021	C251550790	TC00140230	-	ORING00640	ESBP498310	KE06003908	MC6S04X012	SGA2500000
ESB4175201	ESBP417521	C251800950	TC00140250	-		ESBP498310	KE06003908	MC6S04X012	SGA2500000
ESB4175202	ESBP417521	C251800950	TC00140250	-	ORING00640	ESBP498310	KE06003908	MC6S04X012	SGA2500000
ESB4200201	ESBP420021	C252050950	TC00140250	-		ESBP498310	KE06003908	MC6S04X012	SGA2500000
ESB4200202	ESBP420021	C252050950	TC00140250	-	ORING00640	ESBP498310	KE06003908	MC6S04X012	SGA2500000

ESB4-Vario	Pipe ("L" mm)	Coil heater	Thermo-couple	Reflector	Metal seal*	Flange	Ceramic ring	Srew 3 pcs.	Lock ring
	45-125	C250800630	TC00140210	–	–	ESBP498310	KE06003908	MC6S04X012	SGA2500000
	125-150	C251300790	TC00140220	–	–	ESBP498310	KE06003908	MC6S04X012	SGA2500000
	150-175	C251300790	TC00140230	–	–	ESBP498310	KE06003908	MC6S04X012	SGA2500000
	175-300	C251800950	TC00140250	–	–	ESBP498310	KE06003908	MC6S04X012	SGA2500000
	300-400	C251800950	TC00140270	–	–	ESBP498310	KE06003908	MC6S04X012	SGA2500000
				–	–	ESBP498310	KE06003908	MC6S04X012	SGA2500000

* If used in multi-cavity moulds, machine a metal seal groove for ORING00640 / ORING00615 with earlier version.

Date: 030930, © LKM Heatlock Co Ltd

Heatlock PPB1, Mini

Features

- Exceptionally uniform heat distribution along the bushing.
- Direct gating with minimal restriction of the flow channel.
- Plastic undergoes lowest possible thermal stress.
- Compact.

Egenskaper

- Extremt jämn värmefördelning längs bussningen.
- Direktintag–utan restriktion av flytkanalen
- Minsta möjliga termiska påkänning på plasten.
- Kompakt.

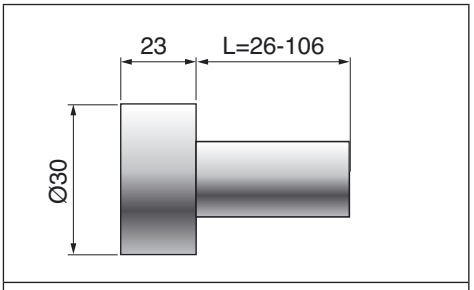

Shot weights <200 g

PPB1

bushing is compact, with shortest installation length L=26mm, and smallest centre spacing 30mm. The flow channel is 4mm in diameter and is made from a single piece of hardened hot-worked steel.
The flow channel continues to within 0,2mm of the front face, resulting in a direct gating bush producing minimal residue on the part and with minimal restriction. The bushing leaves a gate mark 0,2 to 0,7mm long, depending on the resin used, suitable for Amorphous plastics.
As on our other models, heat is supplied by an asymmetrical spiral element to optimise heat distribution. The separate thermocouple measures the temperature at the middle of the tube, where it is hottest. If anything needs replacing you need only change the defective part.
The bushing is fully insulated from the mould by our special ceramic material, which has only 7% of the thermal conductivity of steel and a compressive strength of 2100 N/mm^2. This significantly reduces heat loss to the tool, making temperature distribution in the bushing very uniform.
May be used in single- and multi-cavity tools, together with our fully insulated Heatlock “minifolds”, standard manifolds available from stock for quick delivery, or with a custom made manifold.

PPB1

är en vidareutveckling av våra väl beprövade ingötsbussningar. Vi har genom att låta flytkanalen gå ända fram till 0,2 mm från bussningens frontyta, fått en bussning som ger en liten intagsrest utan att ha någon restriktion i flytkanalen eller intaget. Bussningen lämnar en intagsrest på 0,2-0,7 mm. Lämplig att spruta amorfa material med.
Bussningen är kompakt och har ett minsta inbyggnadsmått ”L”= 26 mm, min. centrum avstånd 30 mm. Flytkanalen har Ø 4, röret är tillverkat i ett stycke varmarbetsstål som härdats.
Värmetillförseln sker som på våra andra modeller med ett olikformat spiralelement för att ge så jämn värmefördelning som möjligt. Termoelementet som är separat mäter temperaturen på rörets mitt, där det är som varmast. Går något sönder behöver Du bara byta det som är trasigt, det spar Du pengar på.
Bussningen är helt isolerad från formen med vår speciella keramik som endast har 7% av stålets värmeledningsförmåga och en tryckhållfasthet på 2100 N/mm^2. Härigenom minskas värmeförlusterna ut till verktyget betydligt. Temperaturen i bussningen blir mycket jämn.
Kan användas i enfacks- eller flerfacksverktyg ihop med våra keramiskt isolerade Heatlock Minifolds, standard varmkanalplattor som finns på lager för snabb leverans, eller med en konventionell varmkanalbalk.

more ▶

This Heatlock series, below, is currently being replaced by the A1-series of nozzles.
Before you design check availability, stock is gradually decreased.
Spare parts will be available until at least end of 2007 (apart form NPT1 bodies)

PPB1

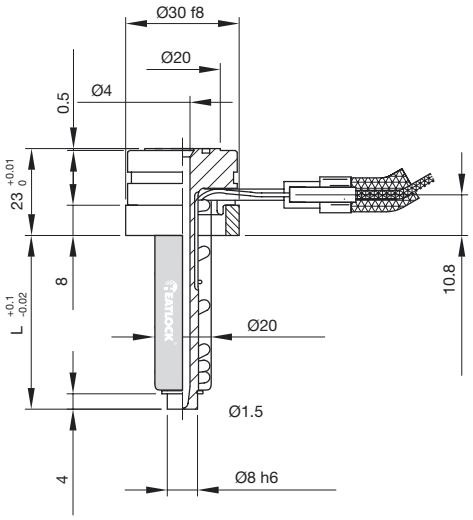

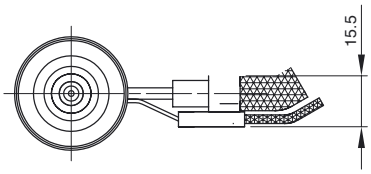

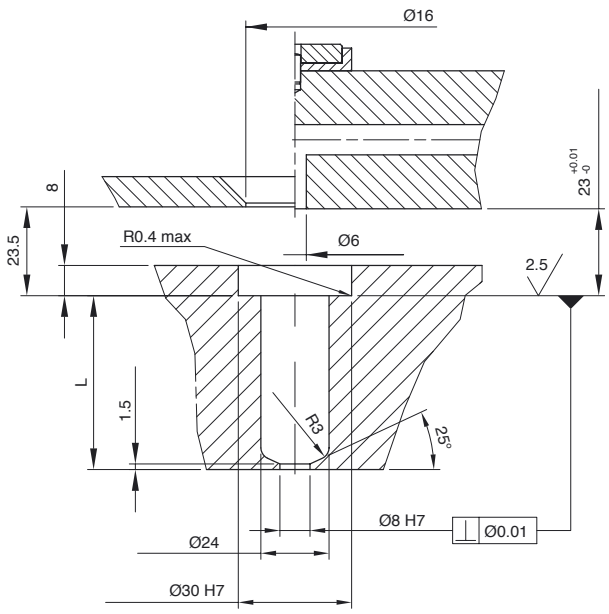

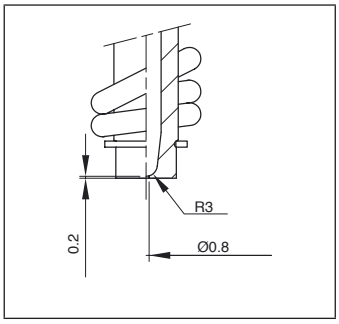

"L" mm	Part No.		Total volume of feed channel in mm³
	Single-cav.	Multi-cav.*	
26	PPB1026101	PPB1026102	560
36	PPB1036101	PPB1036102	686
46	PPB1046101	PPB1046102	812
86	PPB1086101	PPB1086102	1314
106	PPB1106101	PPB1106102	1565

* with O-ring 500 / 608

Can be controlled with various types of temperature controllers intended for hot runner systems with 220/240 V using thermocouple of type Fe-CuNi.

Recommended for the following maximum shot weights:	
Low-viscosity plastic (PS,PE,PP)	200g
Med.-viscosity plastic (ABS,SAN, PA,POM)	100g
High-viscosity plastic (PC,PMMA, Noryl, Filled material)	30g

Gate diameter is Ø0.8 mm on delivery, can be reamed up to Ø1.5 mm if needed. Please, look at page 9 regarding gate diameter.

Length expansion at: °C="L"+X,xx						
°C	26	36	46	86	106	
200	0,06	0,08	0,11	0,20	0,24	
250	0,08	0,10	0,13	0,25	0,31	
300	0,09	0,12	0,16	0,30	0,37	
350	0,10	0,14	0,19	0,35	0,43	

To ensure minimum vestige on the part, measure the actual "L" measurement on each bush, add the length expansion according to the table to get the hole depth ("L"+X,xx) to be drilled in the cavity plate.

Före inbyggnad, mät upp bussningens nominella "L"-mått, lägg därefter till längdutvidgningen så att bussningens spets ligger exakt vid intagspunkten i uppvärmt tillstånd.

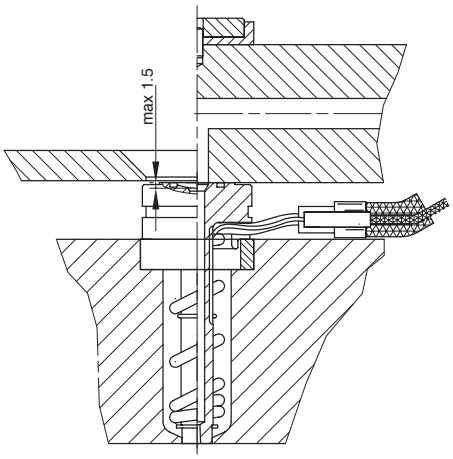

more ▶

Date: 030930, © LKM Heatlock Co Ltd

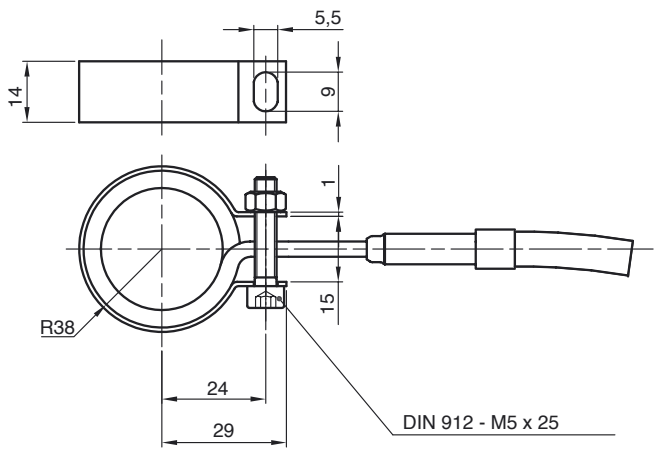

Part No.	Watt	Polarity
B028013180	180	black (red) +

When temperatures of 250-260°C and above are needed it may be advantegous to install a band heater at the back end. This is also the case when shear sensitive materials are to be molded.

Används när en jämn temperatur längs hela bussningen eftersträvas.

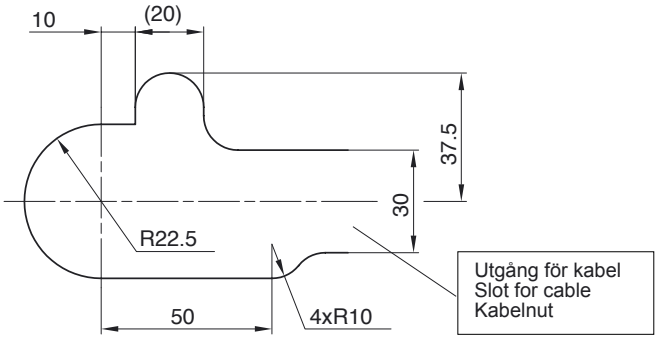

Cavity instructions for bushes with or without bandheater B055020180.

Håltagning för bussning med eller utan bandelement B055020180.

Prior to any assembly refer to our latest assembly instruction, always available on our web site www.heatlock.com

more ▶

This Heatlock series, below, is currently being replaced by the A1-series of nozzles.
Before you design check availability, stock is gradually decreased.
Spare parts will be available until at least end of 2007 (apart form NPT1 bodies)

PPB1

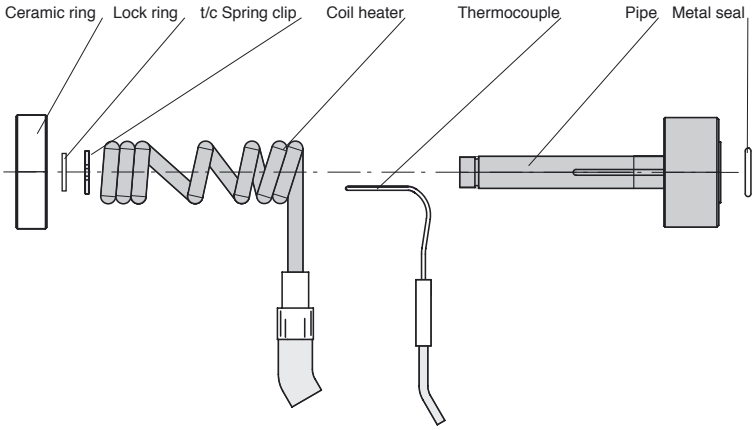

PPB1	Pipe	Coil heater	Thermo-couple	Reflector	*Metal seal	*Ceramic ring KEM...	*Ceramic ring	Lock ring	Spring clip
PPB1026101	PPBP102611	C080330125	TC00140195	–	–	KEM03002308		SGA0800000	ESBP198493
PPB1026102	PPBP102611	C080330125	TC00140195	–	ORING00608	KEM03002308	KEM030023081	SGA0800000	ESBP198493
PPB1036101	PPBP103611	C080430125	TC00140195	–	–	KEM03002308		SGA0800000	ESBP198493
PPB1036102	PPBP103611	C080430125	TC00140195	–	ORING00608	KEM03002308	KEM030023081	SGA0800000	ESBP198493
PPB1046101	PPBP104611	C080530180	TC00140195	–	–	KEM03002308		SGA0800000	ESBP198493
PPB1046102	PPBP104612	C080530180	TC00140195	–	ORING00500	KEM03002308	KE030023081	SGA0800000	ESBP198493
PPB1086101	PPBP108611	C080930240	TC00140210	–	–	KEM03002308		SGA0800000	ESBP198493
PPB1086102	PPBP108611	C080930240	TC00140210	–	ORING00608	KEM03002308		SGA0800000	ESBP198493
PPB1106101	PPBP110611	C081130280	TC00140210	–	–	KEM03002308		SGA0800000	ESBP198493
PPB1106102	PPBP110611	C081130280	TC00140210	–	ORING00608	KEM03002308		SGA0800000	ESBP198493

*) When you are to order spare part always check actual dimensions of the part needed:
The spare part list is what is presently supplied; always check our web site for latest information.

*) Vid beställning av reservdelar, kontrollera alltid artikelns verkliga mått: Förteckningen visar vad som just nu levereras, för korrekt information kontrollera alltid uppgifterna på vår hemsida. Keramik och O-ringen varierar enligt nedan:

ORING00500	O.D.=12,70	I.D.= 9,56
ORING00608	O.D.=14,27	I.D.=11,10
KEM03002308	H=8	
KEM03002381	H=8,1	

Date: 030930, © LKM Heatlock Co Ltd

Heatlock ESB2, Electric Sprue Bushing

Features

- Lowest possible thermal stress on the plastic
- Exceptionally uniform heat distribution along the sprue bushing.
- Ceramic insulation between bushing and mould.
- Low power consumption.

Egenskaper

- Utomordentligt jämn värmefördelning längs bussningen.
- Bussningen går att använda med i stort sett alla av dagens existerande material.
- Minsta möjliga termiska påkänning på plasten.
- Låg effektförbrukning.

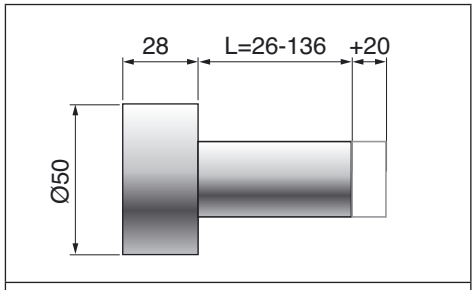

Shot weights <400 g

ESB2

electric sprue bush, has quite different technical properties and far lower price than you have been used to. Designed to eliminate cold sprues, making you more competitive.
HEATLOCK ESB2… is fully insulated from the mould with our special ceramic material, which only has 7% of the heat-conducting capacity of steel. The ceramic compression strength is 2100 N/mm^2 approx, and it is capable of withstanding temperatures of about 1400 °C.
The tube of the bushing is manufactured in a single piece from robust hot-worked steel that has been hardened to stand up to long and arduous service with high reliability.
The rugged longlife heater coil is asymmetrically wound to distribute the heat as uniformly as possible along the bushing.
The thermocouple is separate and measures the temperature in the middle of the tube.
All this makes the bushing reliable and suitable for materials that are sensitive to friction and are difficult to inject.
The bushing leaves a residue 4 to 6mm long, depending on the plastic used.
Can be used in a single cavity or multi-cavity version, together with our fully insulated Heatlock standard manifolds or a custom made conventional manifold that is ceramically insulated.

ESB2

är speciellt framtagen för att eliminera stångintaget och därigenom öka din konkurrenskraft. Största vikt har lagts vid enkelhet och driftsäkerhet för att ge dig en bussning som har lång livslängd till ett lågt pris.
Innerröret är gjort i ett enda stycke av ett varmarbetsstål som härdats för att hålla utan att ge upphov till läckage. Genom att röret är härdat kan även glasfyllda material sprutas.
Det robusta och hållbara spiralelementet är olikformigt lindat över bussningens längd för att ge så jämn värmefördelning som möjligt. Termoelementet som är separat mäter temperaturen på rörets mitt, där det är som varmast. Går något av elementen sönder behöver du bara byta det som är trasigt, något som du spar pengar på.
Bussningen är helt isolerad från formen med vårt speciella keramiska material som endast har 7% av stålets värmeledningsförmåga och har en tryckhållfasthet på 2100 N/mm^2.
Härigenom minskas värmeförlusterna ut till verktyget betydligt. Temperaturen i bussningen blir därigenom mycket jämn.
Allt detta gör bussningen lämplig för även mycket svårsprutade och friktionskänsliga material.
Bussningen lämnar en intagsrest på mellan 4-6mm. Skall en speciell profil bearbetas i framändan väljer man bussningen med extra längd +20mm. Kan användas i såväl enfacks- som flerfacksverktyg.

more ▶

This Heatlock series, below, is currently being replaced by the A1-series of nozzles.
Before you design check availability, stock is gradually decreased.
Spare parts will be available until at least end of 2007 (apart form NPT1 bodies)

ESB2

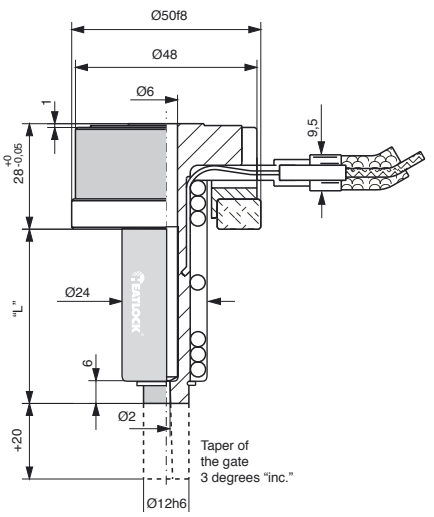

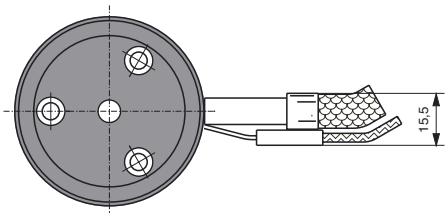

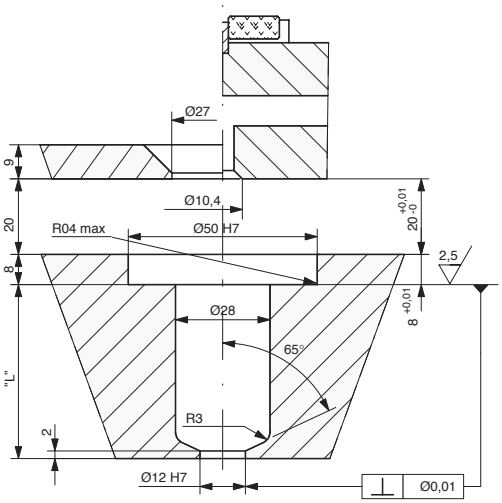

"L" mm	Part No.		Total volume of feed channel in mm³
	Single-cav.	Multi-cav.*	
26	ESB2026101	ESB2026102	1378
26+20	ESB2026201	ESB2026202	2006
46	ESB2046101	ESB2046102	1943
46+20	ESB2046201	ESB2046202	2572
66	ESB2066101	ESB2066102	2508
66+20	ESB2066201	ESB2066202	3137
86	ESB2086101	ESB2086102	3074
86+20	ESB2086201	ESB2086202	3702
106	ESB2106201	ESB2106102	3639
106+20	ESB2106201	ESB2106202	4267
136	ESB2136101	ESB2136102	4487
136+20	ESB2136201	ESB2136202	5115

* with O-ring 608

Can be controlled with various types of temperature controllers intended for hot runner systems with 220/240 V using thermocouple of type Fe-CuNi.

Recommended for the following maximum shot weights:	
Low-viscosity plastic (PS,PE,PP)	400g
Med.-viscosity plastic (ABS,SAN, PA,POM)	300g
High-viscosity plastic (PC,PMMA, Noryl, Filled material)	150g

Gate diameter is Ø2 mm on delivery, can be reamed up to Ø5 mm if needed. Please, look at page 9 regarding gate diameter.

Length expansion at: °C="L"+X,xx						
°C	26	46	66	86	106	136
200	0,06	0,11	0,15	0,20	0,24	0,31
250	0,07	0,13	0,19	0,25	0,30	0,40
300	0,09	0,16	0,23	0,30	0,37	0,47
350	0,10	0,19	0,27	0,35	0,43	0,55

To ensure minimum vestige on the part, measure the actual "L" measurement on each bush, add the length expansion according to the table to get the hole depth ("L"+X,xx) to be drilled in the cavity plate.

Före inbyggnad, mät upp bussningens nominella "L"-mått, lägg därefter till längdutvidgningen så att bussningens spets ligger exakt vid intagspunkten i uppvärmt tillstånd.

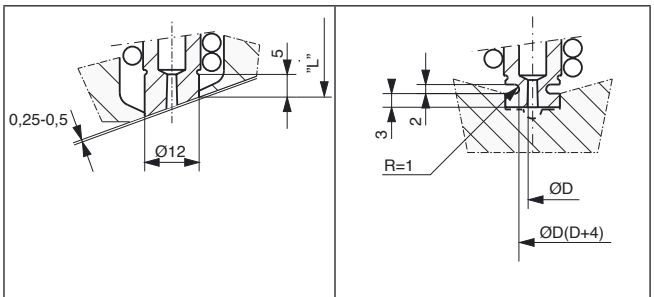

Gate on runner or on surface not perpendicular to bushing.	Increased temperature in the front end of the bush due to reduced heat loss.

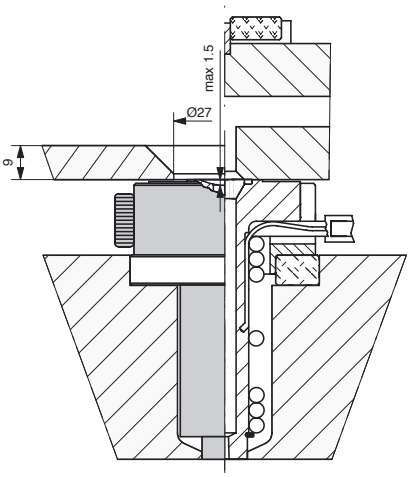

more ▶

Date: 030928, © LKM Heatlock Co Ltd

B048020180

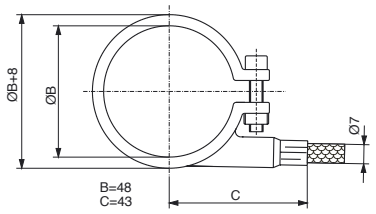

B047015315

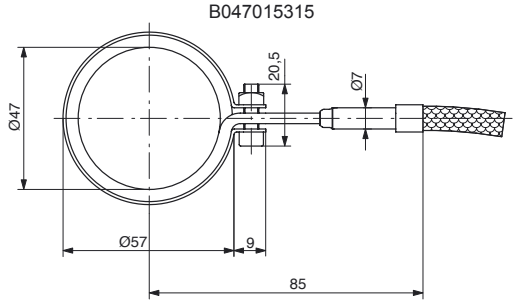

Part No.	Watt	Polarity
B048020180	180	no t/c
B047015315	315	black (red) +

When temperatures of 250-260°C and above are needed it may be advantegous to install a band heater at the back end. This is also the case when shear sensitive materials are to be molded.

Används när en jämn temperatur längs hela bussningen eftersträvas.

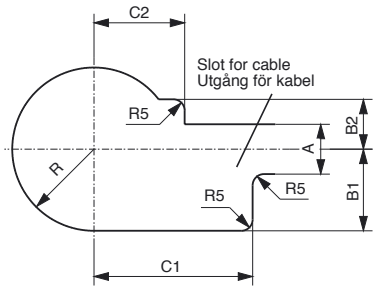

Part No.	R	A	B1	B2	C1	C2
Bush	28	20	-	-	-	-
B047015315	36	22	15	22	45	45
B048020180	36	22	36	22	70	40

Cavity instructions for bushes with or without bandheater B047015315/B048020180.

Håltagning för bussning med eller utan bandelement B047015315/B048020180.

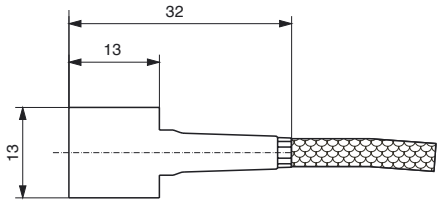

Part No.	Polarity
TC00240000	Black (red) +

Thermocouple used between bandheaters and sprue bush. Measures temperatures up to +400°C. The blade is made of copper and can be contoured to various shapes.

Termogivare för användning mellan bandelement och bussning. Mäter temperaturer upp till +400°C. Bladet är gjort av koppar och kan bearbetas till olika former.

Prior to any assembly refer to our latest assembly instruction, always available on our web site www.heatlock.com

more ▶

This Heatlock series, below, is currently being replaced by the A1-series of nozzles.
Before you design check availability, stock is gradually decreased.
Spare parts will be available until at least end of 2007 (apart form NPT1 bodies)

ESB2

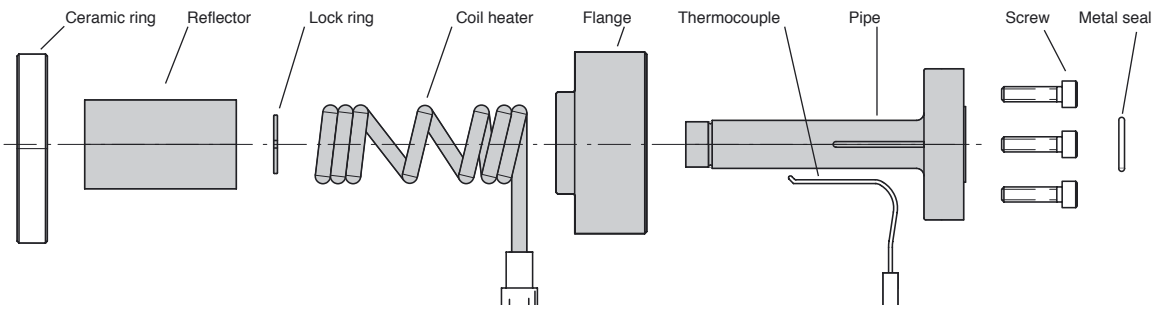

ESB2	Pipe	Coil heater	Thermo-couple	Reflector	Metal Seal	Flange	Ceramic ring	Screw 3 pcs.	Lock ring
ESB2026101	ESBP202611	C120360200	TC00140195	ESBP202605	–	ESBP298210	KE05002708	MC6S04X012	SGA1200000
ESB2026102	ESBP202612	C120360200	TC00140195	ESBP202605	ORING00608	ESBP298210	KE05002708	MC6S04X012	SGA1200000
ESB2026201	ESBP202621	C120360200	TC00140195	ESBP202605	–	ESBP298210	KE05002708	MC6S04X012	SGA1200000
ESB2026202	ESBP202622	C120360200	TC00140195	ESBP202605	ORING00608	ESBP298210	KE05002708	MC6S04X012	SGA1200000
ESB2046101	ESBP204611	C120560315	TC00140200	ESBP204605	–	ESBP298210	KE05002708	MC6S04X012	SGA1200000
ESB2046102	ESBP204612	C120560315	TC00140200	ESBP204605	ORING00608	ESBP298210	KE05002708	MC6S04X012	SGA1200000
ESB2046201	ESBP204621	C120560315	TC00140200	ESBP204605	–	ESBP298210	KE05002708	MC6S04X012	SGA1200000
ESB2046202	ESBP204622	C120560315	TC00140200	ESBP204605	ORING00608	ESBP298210	KE05002708	MC6S04X012	SGA1200000
ESB2066101	ESBP206611	C120760400	TC00140200	ESBP206605	–	ESBP298210	KE05002708	MC6S04X012	SGA1200000
ESB2066102	ESBP206612	C120760400	TC00140200	ESBP206605	ORING00608	ESBP298210	KE05002708	MC6S04X012	SGA1200000
ESB2066201	ESBP206621	C120760400	TC00140200	ESBP206605	–	ESBP298210	KE05002708	MC6S04X012	SGA1200000
ESB2066202	ESBP206622	C120760400	TC00140200	ESBP206605	ORING00608	ESBP298210	KE05002708	MC6S04X012	SGA1200000
ESB2086101	ESBP208611	C120960400	TC00140210	ESBP208605	–	ESBP298210	KE05002708	MC6S04X012	SGA1200000
ESB2086102	ESBP208612	C120960400	TC00140210	ESBP208605	ORING00608	ESBP298210	KE05002708	MC6S04X012	SGA1200000
ESB2086201	ESBP208621	C120960400	TC00140210	ESBP208605	–	ESBP298210	KE05002708	MC6S04X012	SGA1200000
ESB2086202	ESBP208622	C120960400	TC00140210	ESBP208605	ORING00608	ESBP298210	KE05002708	MC6S04X012	SGA1200000
ESB2106101	ESBP210611	C121160500	TC00140210	ESBP210605	–	ESBP298210	KE05002708	MC6S04X012	SGA1200000
ESB2106102	ESBP210612	C121160500	TC00140210	ESBP210605	ORING00608	ESBP298210	KE05002708	MC6S04X012	SGA1200000
ESB2106201	ESBP210621	C121160500	TC00140210	ESBP210605	–	ESBP298210	KE05002708	MC6S04X012	SGA1200000
ESB2106202	ESBP210622	C121160500	TC00140210	ESBP210605	ORING00608	ESBP298210	KE05002708	MC6S04X012	SGA1200000
ESB2136101	ESBP213611	C121460500	TC00140220	ESBP213605	–	ESBP298210	KE05002708	MC6S04X012	SGA1200000
ESB2136102	ESBP213612	C121460500	TC00140220	ESBP213605	ORING00608	ESBP298210	KE05002708	MC6S04X012	SGA1200000
ESB2136201	ESBP213621	C121460500	TC00140220	ESBP213605	–	ESBP298210	KE05002708	MC6S04X012	SGA1200000
ESB2136202	ESBP213622	C121460500	TC00140220	ESBP213605	ORING00608	ESBP298210	KE05002708	MC6S04X012	SGA1200000

Date: 030928, © LKM Heatlock Co Ltd

Heatlock PPB3, Pin Point Bushing

Features

- Competitive price.
- Rugged and simple design for reliable production.
- No restriction of flow channel
- Low power consumption.

Egenskaper

- Konkurrenskraftigt pris.
- Robust och enkel konstruktion som ger hög driftsäkerhet.
- Direktintag utan någon restriktion av flytkanalen.
- Låg energiförbrukning

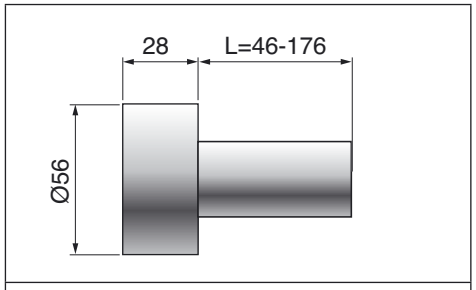

Shot weights <1000 g

PPB3

has been developed from our well proven heated sprue bush. The pin point bushing has therefore exactly the same installation dimensions as ESB3.

The ceramic ring conducts heat only 7 % as well as steel. It´s compression strength is 2100 N/mm^2 approx, and it is capable of withstanding temperatures of about 1400° C.
As the ceramic ring forms a heat barrier at the back of the bushing, heat loss to the mold is substantially reduced. This together with the special design of the coil heater, makes the temperature along the bushing extremely uniform.
The bushing leaves a gate mark 0,5 to 1,5 mm long, depending on the plastic used.
Can be used together with all kinds of temperature controllers designed for hot runner systems 220/240V.
Can be used in a single-cavity or multi-cavity version, together with our fully insulated Heatlock standard manifolds or a custom made conventional manifold that is ceramically insulated.

PPB3

är en vidareutveckling av vår väl beprövade ingötsbussning. Vi har genom att låta flytkanalen gå ända fram till 0,6 mm från bussningens frontyta, fått en bussning som ger en liten intagsrest utan att ha någon restriktion i flytkanalen eller intaget.
Innerröret är gjort i ett enda stycke av ett varmarbetsstål som härdats för att hålla utan att ge upphov till läckage.
Det robusta och hållbara spiralelementet är olikformigt lindat över bussningens längd för att ge så jämn värmefördelning som möjligt.
Termoelementet som är separat mäter temperaturen på rörets mitt, där det är som varmast. Du vet alltid vad den högsta temperaturen är som du utsätter massan för. Går något av elementen sönder behöver du bara byta det som är trasigt, något som du spar pengar på.
Bussningen är helt isolerad från formen med vårt speciella keramiska material som endast har 7% av stålets värmeledningsförmåga och har en tryckhållfasthet på 2100 N/mm^2. Härigenom minskas värmeförlusterna ut till verktyget betydligt. Temperaturen i bussningen blir därigenom mycket jämn.
Bussningen lämnar en intagsrest på 0,5—1,5 mm. Lämplig att spruta amorfa material med.
Kan användas i såväl enfacks- som flerfacksverktyg, ihop med vårt helt isolerade Heatlock fördelarsystem eller med en konventionell varmkanalbalk.

more ▶

This Heatlock series, below, is currently being replaced by the A1-series of nozzles.
Before you design check availability, stock is gradually decreased.
Spare parts will be available until at least end of 2007 (apart form NPT1 bodies)

PPB3

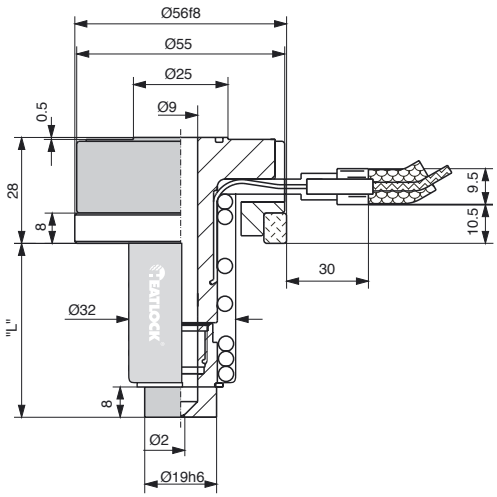

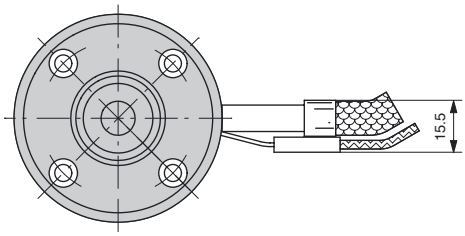

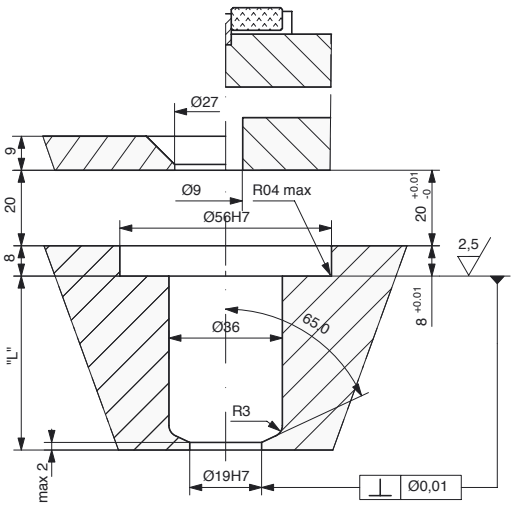

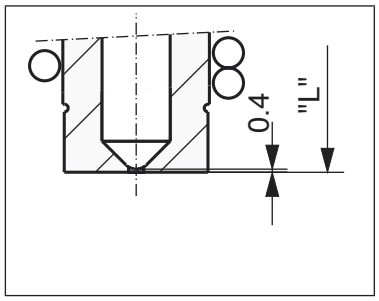

"L" mm	Part No.		Total volume of feed channel in mm³
	Single-cav.	Multi-cav.*	
46	PPB3046101	PPB3046102	4554
66	PPB3066101	PPB3066102	5826
86	PPB3086101	PPB3086102	7098
116	PPB3116101	PPB3116102	9005
146	PPB3146101	PPB3146102	10913
176	PPB3176101	PPB3176102	12820

* with O-ring 630

Can be controlled with various types of temperature controllers intended for hot runner systems with 220/240 V using thermocouple of type Fe-CuNi.

Recommended for the following maximum shot weights:	
Low-viscosity plastic (PS,PE,PP)	1000g
Med.-viscosity plastic (ABS,SAN, PA,POM)	400g
High-viscosity plastic (PC,PMMA, Noryl, Filled material)	200g

Gate diameter is 2 mm on delivery, can be reamed up to 3-3.5 mm if needed.

Length expansion at: °C="L"+X,xx						
°C	46	66	86	116	146	176
200	0,11	0,15	0,20	0,27	0,34	0,40
250	0,13	0,19	0,25	0,33	0,42	0,51
300	0,16	0,23	0,30	0,40	0,50	0,61
350	0,19	0,27	0,35	0,47	0,59	0,71

To ensure minimum vestige on the part, measure the actual "L" measurement on each bush, add the length expansion according to the table to get the hole depth ("L"+X,xx) to be drilled in the cavity plate.

Före inbyggnad, mät upp bussningens nominella "L"-mått, lägg därefter till längdutvidgningen så att bussningens spets ligger exakt vid intagspunkten i uppvärmt tillstånd.

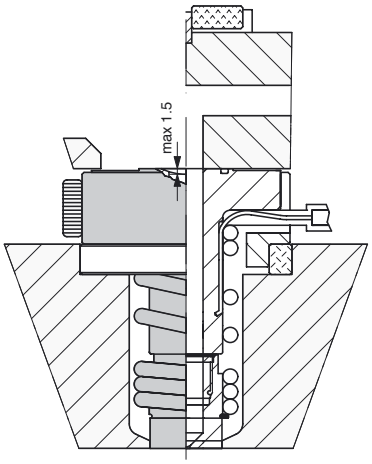

more ▶

Date: 030930, © LKM Heatlock Co Ltd

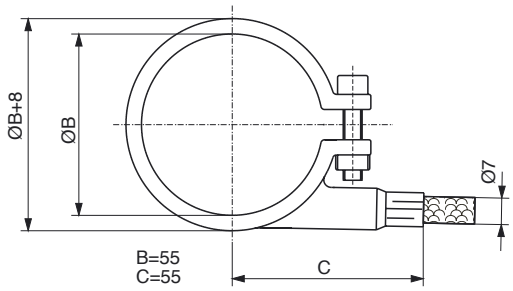

Part No.	Watt	Polarity
B055020180	180	no t/c

When temperatures of 250-260°C and above are needed it may be advantegous to install a band heater at the back end together with thermocouple (TC00240000). This is also the case when shear sensitive materials are to be molded.

Används när en jämn temperatur längs hela bussningen eftersträvas. Då tillsammans med ett termoelement (TC00240000).

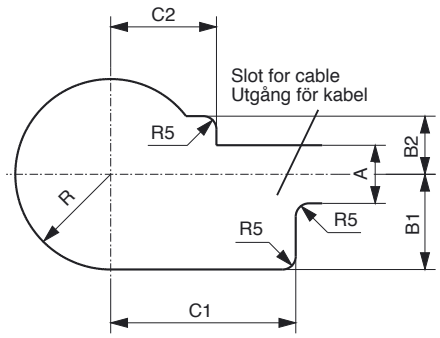

Part No.	R	A	B1	B2	C1	C2
Bush	28	22	-	-	-	-
B055020180	40	22	42	22	85	45

Cavity instructions for bushes with or without bandheater B055020180.

Håltagning för bussning med eller utan bandelement B055020180.

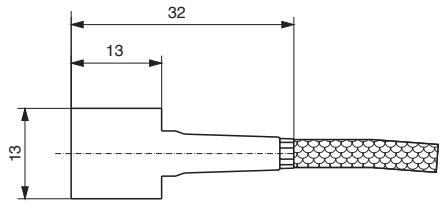

Part No.	Polarity
TC00240000	Black (red) +

Thermocouple used between bandheaters and sprue bush. Measures temperatures up to +400°C. The blade is made of copper and can be contoured to various shapes.

Termogivare för användning mellan bandelement och bussning. Mäter temperaturer upp till +400°C. Bladet är gjort av koppar och kan bearbetas till olika former.

Prior to any assembly refer to our latest assembly instruction, always available on our web site www.heatlock.com

more ▶

This Heatlock series, below, is currently being replaced by the A1-series of nozzles.
Before you design check availability, stock is gradually decreased.
Spare parts will be available until at least end of 2007 (apart form NPT1 bodies)

PPB3

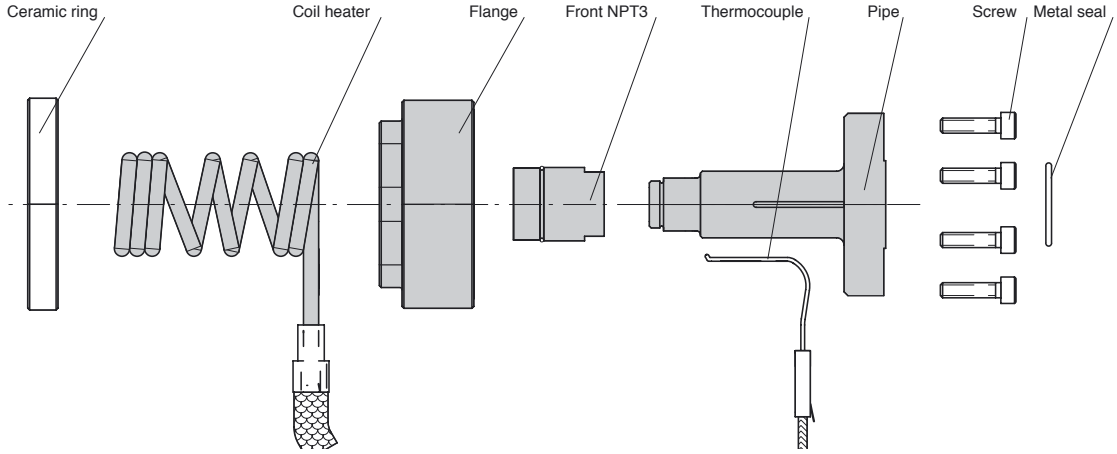

PPB3	Pipe	Coil heater	Thermo-couple	Front ESB3	Metal seal	Flange	Ceramic ring	Srew 4 pcs.	Lock ring
PPB3046101	SBBP304630	C190550335	TC00140200	PPBF30010	–	ESBP398210	KEM05604408	MC6S04X012	SGA1900000
PPB3046102	SBBP304630	C190550335	TC00140200	PPBF30010	ORING00630	ESBP398210	KEM05604408	MC6S04X012	SGA1900000
PPB3066101	SBBP306630	C190750335	TC00140210	PPBF30010	–	ESBP398210	KEM05604408	MC6S04X012	SGA1900000
PPB3066102	SBBP306630	C190750335	TC00140210	PPBF30010	ORING00630	ESBP398210	KEM05604408	MC6S04X012	SGA1900000
PPB3086101	SBBP308630	C190950560	TC00140210	PPBF30010	–	ESBP398210	KEM05604408	MC6S04X012	SGA1900000
PPB3086102	SBBP308630	C190950560	TC00140210	PPBF30010	ORING00630	ESBP398210	KEM05604408	MC6S04X012	SGA1900000
PPB3116101	SBBP311630	C191250560	TC00140220	PPBF30010	–	ESBP398210	KEM05604408	MC6S04X012	SGA1900000
PPB3116102	SBBP311630	C191250560	TC00140220	PPBF30010	ORING00630	ESBP398210	KEM05604408	MC6S04X012	SGA1900000
PPB3146101	SBBP314630	C191550835	TC00140230	PPBF30010	–	ESBP398210	KEM05604408	MC6S04X012	SGA1900000
PPB3146102	SBBP314630	C191550835	TC00140230	PPBF30010	ORING00630	ESBP398210	KEM05604408	MC6S04X012	SGA1900000
PPB3176101	SBBP317630	C191850835	TC00140250	PPBF30010	–	ESBP398210	KEM05604408	MC6S04X012	SGA1900000
PPB3176102	SBBP317630	C191850835	TC00140250	PPBF30010	ORING00630	ESBP398210	KEM05604408	MC6S04X012	SGA1900000

Date: 030930, © LKM Heatlock Co Ltd

Heatlock NPT1…,Needle Point Topless Mini

Features

- Ceramic insulation between bushing and mould.
- Easy to start, even with materials that are hard to inject.
- Ceramic insulation between bushing and mould.
- Compact.

Egenskaper

- Keramiskt isolerad från formen.
- Lättstartad även med svårsprutade material.
- Minimal intagsrest som enda märke på detaljen.
- Non-stressful treatment of the material, suitable also for materials sensitive to friction.

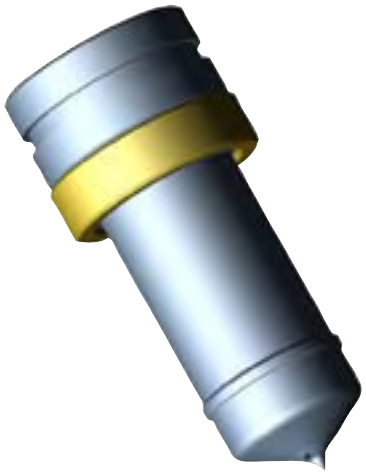

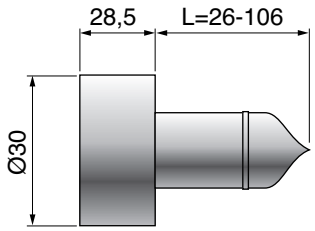

Shot weights <150 g

NPT1

Bushing for direct gating with only the gate residue as witness mark on the part. An uninterrupted flow channel together with a maximum heat transfer down to the gate area are two of the main features which guarantees minimal stress to the melt coming through the bush.
The tube of the bushing is manufactured in a single piece from robust material to stand up to long and arduous service with high reliability. The material has a very high heat conductivity which ensures the heat supply down to the gate. This makes it possible to keep the gate easily open and use a small gate diameter with minimal vestige on the part as a result.
As with all our other bushes it is fully insulated from the mould with our special ceramic material, which has only 7% of the heat-conducting capacity of steel.
The rugged longlife heater coil is asymmetrically wound to distribute the heat as uniformly as possible along the bushing. The thermocouple is separate and measures the temperature in the middle of the tube.
All this makes the bushing reliable and suitable for materials that are sensitive to friction and are difficult to inject. Tested with materials such as PA 66 where it proved to be easy to start.
Can be used in a single-cavity or multi-cavity version, together with Heatlock standard manifolds or a custom made conventional manifold that is ceramically insulated.

NPT1

Bussningen för direktintag där endast den minimala intagsresten blir synlig på detaljen. Konstruktionen av bussningens spets och utformningen av flytkanalens profil har utformats så att man åstadkommer en maximal temperaturöverföring ned till intaget samtidigt som materialet utsätts för så lite påverkan som möjligt.
Bussningens rör är tillverkat av ett enda stycke, i ett material som har hög hållfasthet för att tåla en lång och hård användning med hög tillförlitlighet. Materialet som har en mycket hög värmeledningsförmåga gör att temperaturen vid intagspunkten hålls på en hög nivå så att intaget lätt kan hållas öppet. Intagsresten blir därigenom mycket minimal då mycket små intagsdiametrar kan användas.
Den är liksom alla våra andra bussningar helt isolerad från formen med vårt speciella keramiska material som endast har 7 % av stålets värmeledningförmåga.
Det robusta spiralelementet som har lång livslängd, är olikformigt lindat för att ge en så jämn värmefördelning som möjligt längs bussningen.
Avkännaren är separat och mäter temperaturen mitt på röret.
Allt detta gör bussningen tillförlitlig, lämplig även för friktionskänsliga och svårsprutade material. Provad i bland annat material som PA 6-6 där det visat sig varalättstartat.
Kan användas i enfacksutförande eller i flerfacksutförande.
Tillsammans med en keramiskt isolerad varmkanalbalk.

more ▶

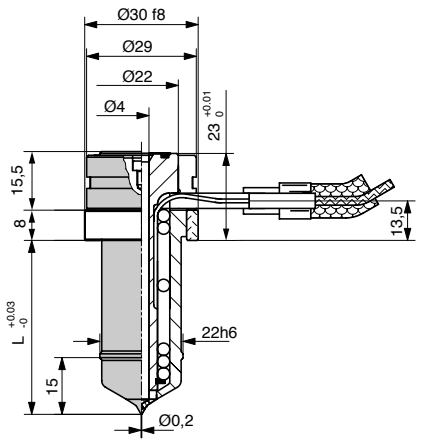

"L" mm	Part No.		Total volume of feed channel in mm³
	Single-cav.	Multi-cav.*	
26	NPT1026411	NPT1026412	558
36	NPT1036411	NPT1036412	683
46	NPT1046411	NPT1046412	809
86	–	NPT1086412	1311
106	–	NPT1106412	1563

* with O-ring 608

Can be controlled with various types of temperature controllers intended for hot runner systems with 220/240 V using thermocouple of type Fe-CuNi.

Recommended for the following maximum shot weights:	
Low-viscosity plastic (PS,PE,PP)	150g
Med.-viscosity plastic (ABS,SAN, PA,POM)	80g
High-viscosity plastic (PC,PMMA, Noryl, Filled material)	20g

Max gate Ø2.5 mm.

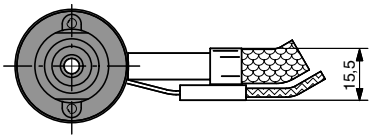

Length expansion at: °C="L"+X,xx						
°C	26	36	46	86	106	
200	0,03	0,04	0,05	0,10	0,12	
250	0,04	0,05	0,06	0,12	0,15	
300	0,04	0,06	0,08	0,14	0,18	
350	0,05	0,07	0,09	0,17	0,21	

To ensure minimum vestige on the part, measure the actual "L" measurement on each bush, add the length expansion according to the table to get the hole depth ("L"+X,xx) to be drilled in the cavity plate.

Före inbyggnad, mät upp bussningens nominella "L"-mått, lägg därefter till längdutvidgningen så att bussningens spets ligger exakt vid intagspunkten i uppvärmt tillstånd.

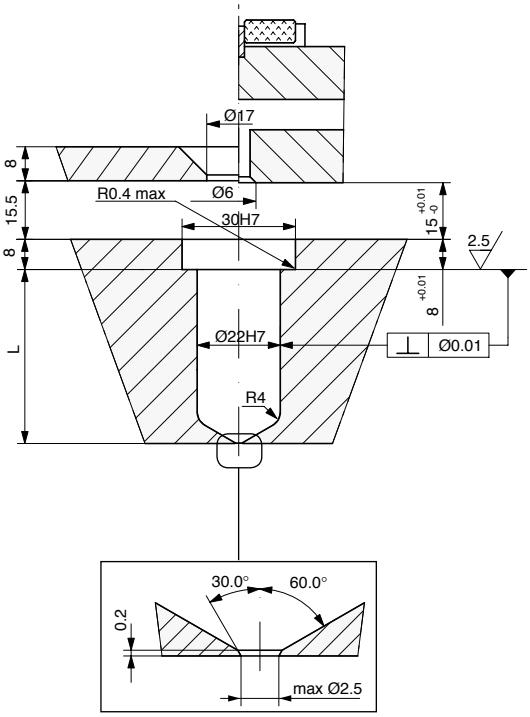

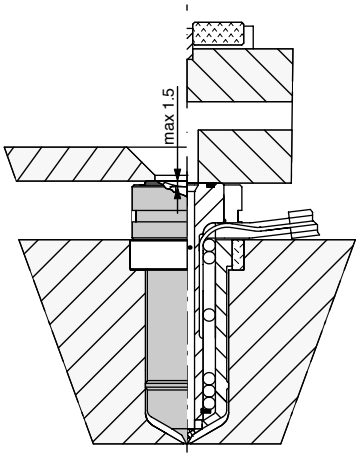

more ▶

Date: 031002, © LKM Heatlock Co Ltd

Prior to any assembly refer to our latest assembly instruction, always available on our web site www.heatlock.com

more ▶

This Heatlock series, below, is currently being replaced by the A1-series of nozzles.
Before you design check availability, stock is gradually decreased.
Spare parts will be available until at least end of 2007 (apart form NPT1 bodies)

NPT1

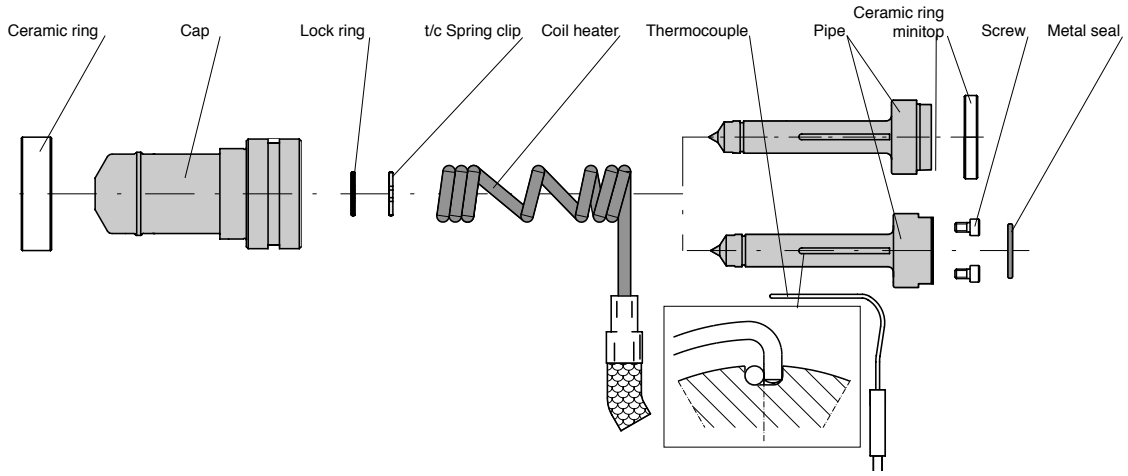

NPT1	Pipe*	Coil heater	Thermo-couple	Cap*	Metal seal	Ceramic ring (mini)	Ceramic ring	Screw	Spring clip	Lock ring
NPT1026411	NPT102641	C080330125	TC00140195	NPT102641	–	KE02201603	KEM03002308	-	ESBP198493	SGA0800000
NPT1026412	NPT102641	C080330125	TC00140195	NPT102641	ORING00608	–	KEM03002308	MC6SM2,5x4	ESBP198493	SGA0800000
NPT1036411	NPT103641	C080430125	TC00140195	NPT103641	–	KE02201603	KEM03002308	-	ESBP198493	SGA0800000
NPT1036412	NPT103641	C080430125	TC00140195	NPT103641	ORING00608	–	KEM03002308	MC6SM2,5x4	ESBP198493	SGA0800000
NPT1046411	NPT104641	C080530180	TC00140195	NPT104641	–	KE02201603	KEM03002308	-	ESBP198493	SGA0800000
NPT1046412	NPT104641	C080530180	TC00140195	NPT104641	ORING00608	–	KEM03002308	MC6SM2,5x4	ESBP198493	SGA0800000
NPT1086412	NPT108641	C080930240	TC00140210	NPT108641	ORING00608	–	KEM03002308	MC6SM2,5x4	ESBP198493	SGA0800000
NPT1106412	NPT110641	C081130280	TC00140210	NPT110641	ORING00608	–	KEM03002308	MC6SM2,5x4	ESBP198493	SGA0800000
*One unit.										

Date: 031002, © LKM Heatlock Co Ltd

Heatlock NPT1-Xtnd

Features

- Withstand higher injection pressures.
- For use in very profiled surfaces.
- Easier to cool.
- Easy installation.
- Easy to use

Egenskaper

- Klarar högre spruttryck.
- För användning vid mera komplexa formgeometrier.
- Enkel att kyla.
- Enkel att installera.
- Enkel att använda.

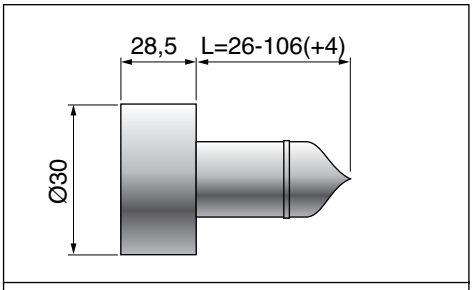

Shot weights <150 g

NPT1-Xtnd

Bushing for direct gating with only the gate residue as witness mark on the part. An uninterrupted flow channel together with a maximum heat transfer down to the gate area are two of the main features which guarantees minimal stress to the melt coming through the bush.
The tube of the bushing is manufactured in a single piece from robust material to stand up to long and arduous service with high reliability. The material has a very high heat conductivity which ensures the heat supply down to the gate. This makes it possible to keep the gate easily open and use a small gate diameter with minimal vestige on the part as a result.
As with all our other bushes it is fully insulated from the mould with our special ceramic material, which has only 7% of the heat conducting capacity of steel.
The rugged longlife heater coil is asymmetrically wound to distribute the heat as uniformly as possible along the bushing. The thermocouple is separate and measures the temperature in the middle of the tube.
All this makes the bushing reliable and suitable for materials that are sensitive to friction and are difficult to inject. Tested with materials such as PA 66 where it proved to be easy to start.
Can be used in a single cavity or multi-cavity version, together with Heatlock standard manifolds or a custom made conventional manifold that is ceramically insulated.

NPT1-Xtnd

bussningen för direktintag där endast den minimala intagsresten blir synlig på detaljen. Konstruktionen av bussningens spets och utformningen av flytkanalens profil har utformats så att man åstadkommer en maximal temperaturöverföring ned till intaget samtidigt som materialet utsätts för så lite påverkan som möjligt.
Bussningens rör är tillverkat av ett enda stycke, i ett material som har hög hållfasthet för att tåla en lång och hård användning med hög tillförlitlighet. Materialet som har en mycket hög värmeledningsförmåga gör att temperaturen vid intagspunkten hålls på en hög nivå så att intaget lätt kan hållas öppet. Intagsresten blir därigenom mycket minimal då mycket små intagsdiametrar kan användas.
Den är liksom alla våra andra bussningar helt isolerad från formen med vårt speciella keramiska material som endast har 7 % av stålets värmeledningförmåga.
Det robusta spiralelementet som har lång livslängd, är olikformigt lindat för att ge en så jämn värmefördelning som möjligt längs bussningen.
Avkännaren är separat och mäter temperaturen mitt på röret.
Allt detta gör bussningen tillförlitlig, lämplig även för friktionskänsliga och svårsprutade material. Provad i bland annat material som PA 6-6 där det visat sig vara lättstartat.
Kan användas i enfacksutförande eller i flerfacksutförande.
Tillsammans med en keramiskt isolerad varmkanalbalk.

more ▶

This Heatlock series, below, is currently being replaced by the A1-series of nozzles.
Before you design check availability, stock is gradually decreased.
Spare parts will be available until at least end of 2007 (apart form NPT1 bodies)

NPT1-Xtnd

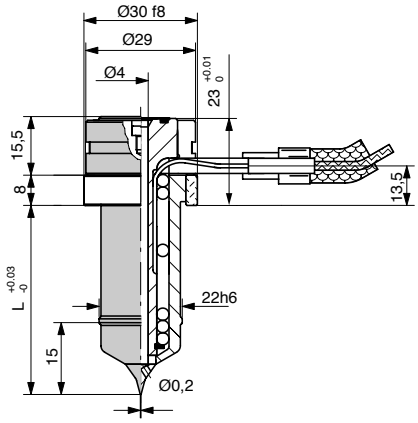

"L" mm	Part No.		Total volume of feed channel in mm³
	Single-cav.	Multi-cav.*	
26+4	NPT1026511	NPT1026512	558
36+4	NPT1036511	NPT1036512	683
46+4	NPT1046511	NPT1046512	809
86+4	–	NPT1086512	1311
106+4	–	NPT1106512	1563

* with O-ring 608. 86 and 106 lenghts will be delivered within 6 weeks

Can be controlled with various types of temperature controllers intended for hot runner systems with 220/240 V using thermocouple of type Fe-CuNi.

Recommended for the following maximum shot weights:	
Low-viscosity plastic (PS,PE,PP)	150g
Med.-viscosity plastic (ABS,SAN, PA,POM)	80g
High-viscosity plastic (PC,PMMA, Noryl, Filled material)	20g

Max gate Ø2.5 mm.

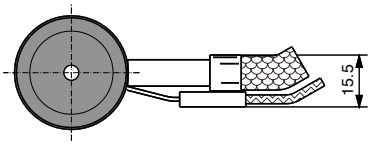

Length expansion at: °C="L"+X,xx						
°C	26	36	46	86	106	
200	0,03	0,04	0,05	0,10	0,12	
250	0,04	0,05	0,06	0,12	0,15	
300	0,04	0,06	0,08	0,14	0,18	
350	0,05	0,07	0,09	0,17	0,21	

To ensure minimum vestige on the part, measure the actual "L" measurement on each bush, add the length expansion according to the table to get the hole depth ("L"+X,xx) to be drilled in the cavity plate.

Före inbyggnad, mät upp bussningens nominella "L"-mått, lägg därefter till längdutvidgningen så att bussningens spets ligger exakt vid intagspunkten i uppvärmt tillstånd.

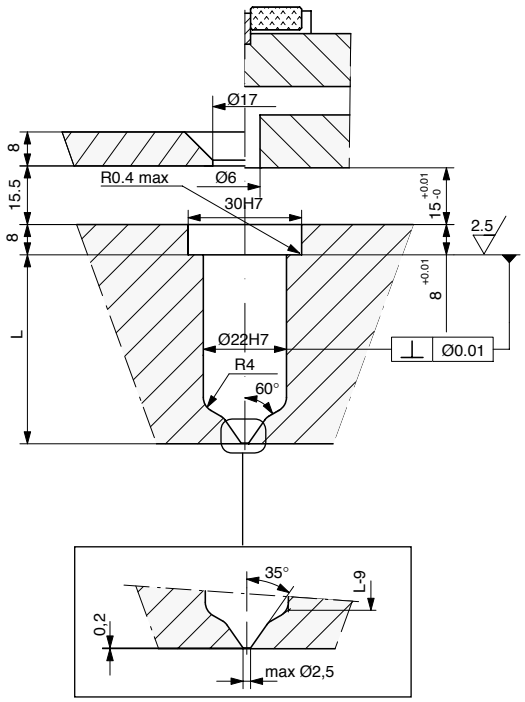

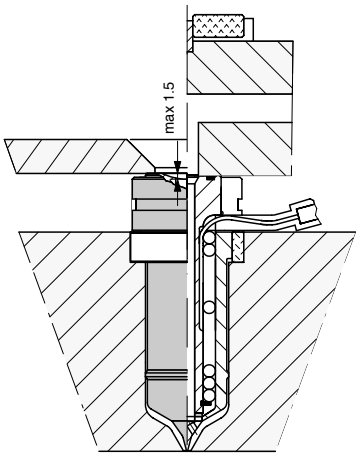

more ▶

Date: 031002, © LKM Heatlock Co Ltd

Prior to any assembly refer to our latest assembly instruction, always available on our web site www.heatlock.com

more ▶

This Heatlock series, below, is currently being replaced by the A1-series of nozzles.
Before you design check availability, stock is gradually decreased.
Spare parts will be available at least end of 2007 (apart form NPT1 bodies)

NPT1 - Xtnd

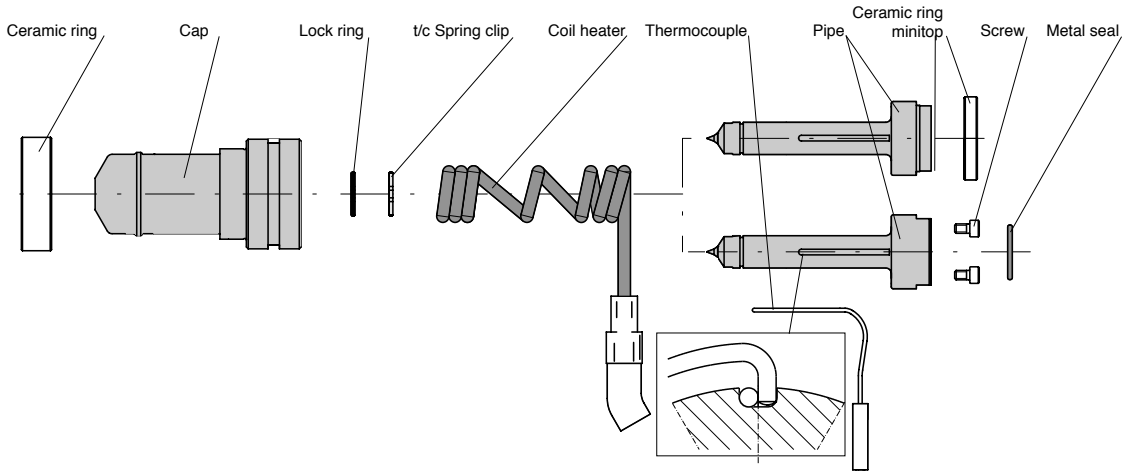

NPT1	Pipe*	Coil heater	Thermo-couple	Cap*	Metal seal	Ceramic ring (mini)	Ceramic ring	Screw	Spring clip	Lock ring
NPT1026511	NPT102651	C080330125	TC00140195	NPT102641	–	KE02201603	KEM03002308	-	ESBP198493	SGA0800000
NPT1026512	NPT102651	C080330125	TC00140195	NPT102641	ORING00608	–	KEM03002308	MC6SM2,5x4	ESBP198493	SGA0800000
NPT1036511	NPT103651	C080430125	TC00140195	NPT103641	–	KE02201603	KEM03002308	-	ESBP198493	SGA0800000
NPT1036512	NPT103651	C080430125	TC00140195	NPT103641	ORING00608	–	KEM03002308	MC6SM2,5x4	ESBP198493	SGA0800000
NPT1046511	NPT104651	C080530180	TC00140195	NPT104641	–	KE02201603	KEM03002308	-	ESBP198493	SGA0800000
NPT1046512	NPT104651	C080530180	TC00140195	NPT104641	ORING00608	–	KEM03002308	MC6SM2,5x4	ESBP198493	SGA0800000
NPT1086512	NPT108651	C080930240	TC00140210	NPT108641	ORING00608	–	KEM03002308	MC6SM2,5x4	ESBP198493	SGA0800000
NPT1106512	NPT110651	C081130280	TC00140210	NPT110641	ORING00608	–	KEM03002308	MC6SM2,5x4	ESBP198493	SGA0800000

*One unit.

Date: 031002, © LKM Heatlock Co Ltd

Heatlock NPT2, Needle Point Topless

Features

- Minimum gate residue as only witness mark on the part.
- Easy to start, even with materials that are hard to inject.
- Ceramic insulation between bushing and mould.
- Non-stressful treatment of the material, suitable also for materials sensitive to friction.

Egenskaper

- Keramiskt isolerad från formen.
- Lättstartad även med svårsprutade material.
- Minimal intagsrest som enda märke på detaljen.
- Skonsam behandling av materialet, lämplig även för friktionskänsliga material.

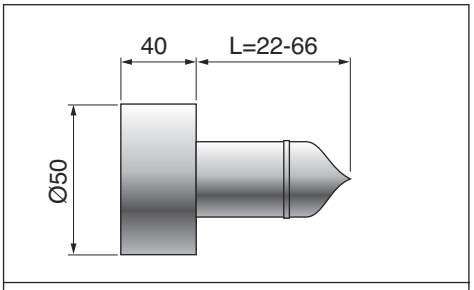

Shot weights <350 g

NPT2

Bushing for direct gating with only the gate residue as witness mark on the part. An uninterrupted flow channel together with a maximum heat transfer down to the gate area, are two of the main features which guarantee minimal stress to the melt coming through the bush.
The tube of the bushing is manufactured in a single piece from robust material to stand up to long and arduous service with high reliability. The material has a very high heat conductivity which ensures the heat supply down to the gate. This makes it possible to keep the gate easily open and use a small gate diameter with minimal vestige on the part as a result.
As with all our other bushes it is fully insulated from the mould with our special ceramic material, which has only 7% of the heat-conducting capacity of steel.
The rugged longlife heater coil is asymmetrically wound to distribute the heat as uniformly as possible along the bushing. The thermocouple is separate and measures the temperature in the middle of the tube.
All this makes the bushing reliable and suitable for materials that are sensitive to friction and difficult to inject. Tested with materials such as PA 66 where it proved to be easy to start.
Can be used in a single-cavity or multi-cavity version, together with our fully insulated Heatlock distribution system or with a conventional manifold ceramically insulated.

NPT2

Bussningen för direktintag där endast den minimala intagsresten blir synlig på detaljen. Konstruktionen av bussningens spets och utformningen av flytkanalens profil har utformats så att man åstadkommer en maximal temperaturöverföring ned till intaget samtidigt som materialet utsätts för så lite påverkan som möjligt.
Bussningens rör är tillverkat av ett enda stycke, i ett material som har hög hållfasthet för att tåla en lång och hård användning med hög tillförlitlighet. Materialet som har en mycket hög värmeledningsförmåga gör att temperaturen vid intagspunkten hålls på en hög nivå så att intaget lätt kan hållas öppet. Intagsresten blir därigenom mycket minimal då mycket små intagsdiametrar kan användas.
Den är liksom alla våra andra bussningar helt isolerad från formen med vårt speciella keramiska material som endast har 7 % av stålets värmeledningförmåga. Det robusta spiralelementet som har lång livslängd, är olikformigt lindat för att ge en så jämn värmefördelning som möjligt längs bussningen. Avkännaren är separat och mäter temperaturen mitt på röret.
Allt detta gör bussningen tillförlitlig, lämplig även för friktionskänsliga och svårsprutade material. Provad i bland annat material som PA 66 där det visat sig vara lättstartat.
Kan användas i enfacksutförande eller i flerfacksutförande. Ihop med vårt helt isolerade Heatlock fördelarsystem eller med en konventionell varmkanalbalk också denna keramiskt isolerad.

more ▶

This Heatlock series, below, is currently being replaced by the A1-series of nozzles.
Before you design check availability, stock is gradually decreased.
Spare parts will be available until at least end of 2007 (apart form NPT1 bodies)

NPT2

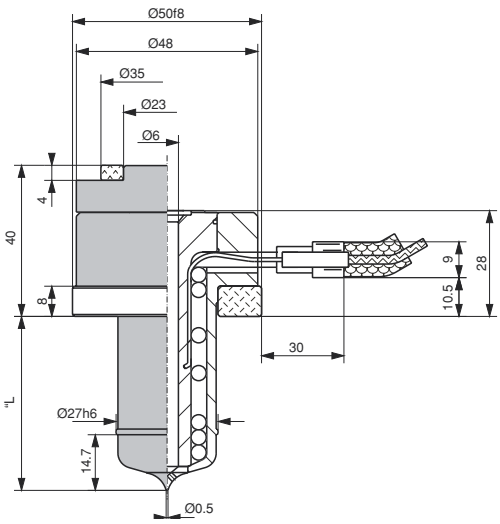

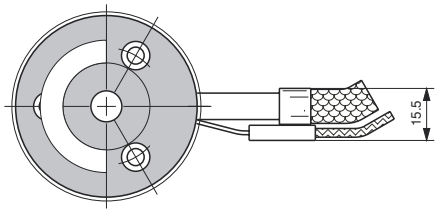

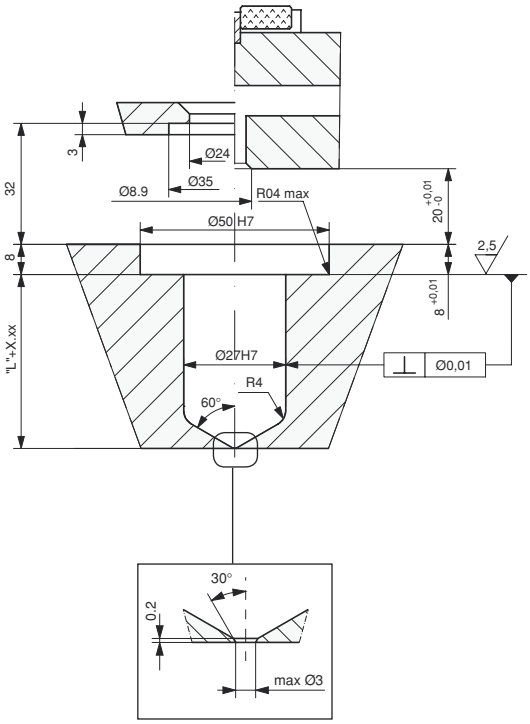

"L" mm	Part No.		Total volume of feed channel in mm³
	Single-cav.	Multi-cav.*	
26	NPT2026411	NPT2026412	1374
46	NPT2046411	NPT2046412	1940
66	NPT2066411	NPT2066412	2505

* with O-ring 500

Can be controlled with various types of temperature controllers intended for hot runner systems with 220/240 V using thermocouple of type Fe-CuNi.

Recommended for the following maximum shot weights:	
Low-viscosity plastic (PS,PE,PP)	350g
Med.-viscosity plastic (ABS,SAN, PA,POM)	150g
High-viscosity plastic (PC,PMMA, Noryl, Filled material)	30g

Gate diameter can be reamed up to approx. 3.0 mm, if needed.

Length expansion at: °C="L"+X,xx						
°C	26	46	66	-	-	-
200	0,10	0,17	0,23	-	-	-
250	0,13	0,21	0,30	-	-	-
300	0,16	0,26	0,36	-	-	-
350	0,19	0,30	0,42	-	-	-

To ensure minimum vestige on the part, measure the actual "L" measurement on each bush, add the length expansion according to the table to get the hole depth ("L"+X,xx) to be drilled in the cavity plate.

Före inbyggnad, mät upp bussningens nominella "L"-mått, lägg därefter till längdutvidgningen så att bussningens spets ligger exakt vid intagspunkten i uppvärmt tillstånd.

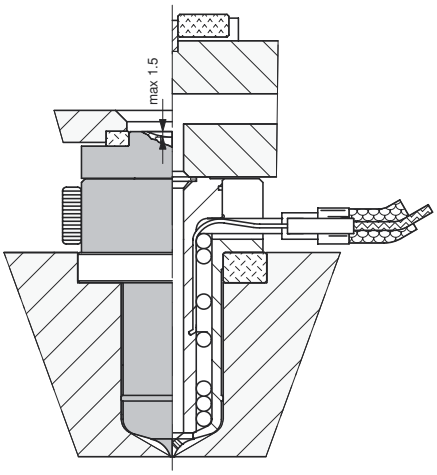

more ▶

Date: 031002, © LKM Heatlock Co Ltd

B048020180

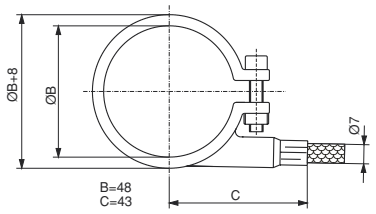

B047015315

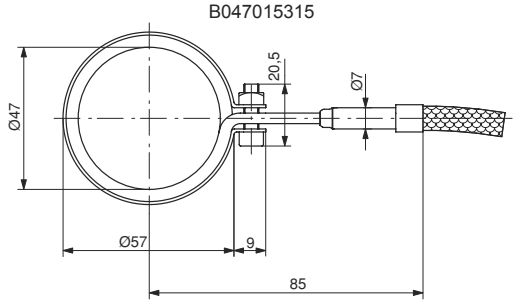

Part No.	Watt	Polarity
B048020180	180	no t/c
B047015315	315	black (red) +

When temperatures of 250-260°C and above are needed it may be advantegous to install a band heater at the back end. This is also the case when shear sensitive materials are to be molded.

Används när en jämn temperatur längs hela bussningen eftersträvas.

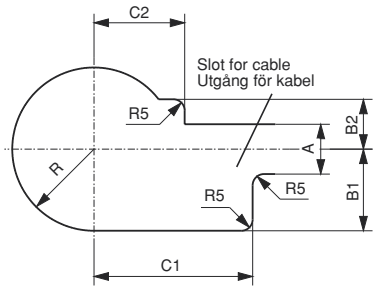

Part No.	R	A	B1	B2	C1	C2
Bush	28	20	-	-	-	-
B047015315	36	22	15	22	45	45
B048020180	36	22	36	22	70	40

Cavity instructions for bushes with or without bandheater B047015315/B048020180.

Håltagning för bussning med eller utan bandelement B047015315/B048020180.

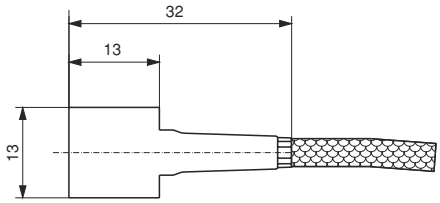

Part No.	Polarity
TC00240000	Black (red) +

Thermocouple used between bandheaters and sprue bush. Measures temperatures up to +400°C. The blade is made of copper and can be contoured to various shapes.

Termogivare för användning mellan bandelement och bussning. Mäter temperaturer upp till +400°C. Bladet är gjort av koppar och kan bearbetas till olika former.

Prior to any assembly refer to our latest assembly instruction, always available on our web site www.heatlock.com

more ▶

This Heatlock series, below, is currently being replaced by the A1-series of nozzles.
Before you design check availability, stock is gradually decreased.
Spare parts will be available until at least end of 2007 (apart form NPT1 bodies)

NPT2

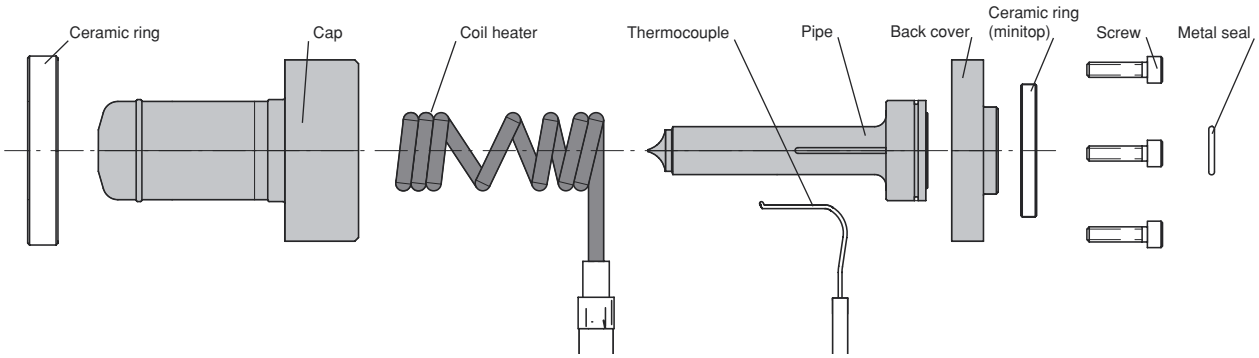

PPB2	Pipe	Coil heater	Thermo-couple	Cap	Metal Seal	Ceramic ring (minitop)	Ceramic ring	Screw	Back cover
NPT2026411	NPTP202612	C120360200	TC00140195	NPTP202605	ORING00500	KE03502304	KE05002708	MC6S04X022(3)	NPBP293710
NPT2026412	NPTP202612	C120360200	TC00140195	NPTP202605	ORING00500	KE03502304	KE05002708	MC6S04X012(1)	-
NPT2046411	NPTP204612	C120560315	TC00140200	NPTP202605	ORING00500	KE03502304	KE05002708	MC6S04X022(3)	NPBP293710
NPT2046412	NPTP204612	C120560315	TC00140200	NPTP202605	ORING00500	KE03502304	KE05002708	MC6S04X012(1)	-
NPT2066411	NPTP206612	C120760400	TC00140200	NPTP202605	ORING00500	KE03502304	KE05002708	MC6S04X022(3)	NPBP293710
NPT2066412	NPTP206612	C120760400	TC00140200	NPTP202605	ORING00500	KE03502304	KE05002708	MC6S04X012(1)	-

Date: 031002, © LKM Heatlock Co Ltd

Heatlock NPT3…Needle Point Topless.

Features

- Withstand higher injection pressures.
- For use in very profiled surfaces.
- Easier to cool.
- Easy installation.
- Easy to use.

Egenskaper

- Klarar högre spruttryck.
- För användning vid mera komplexa formgeometrier.
- Enkel att kyla.
- Enkel att hantera.
- Enkel att använda.

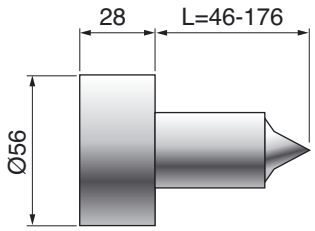

Shot weights <1000 g

NPT3

Bushing for direct gating with only the gate residue as witness mark on the part. An uninterrupted flow channel together with a maximum heat transfer down to the gate area are two of the main features which guarantees minimal stress to the melt coming through the bush.
The tip of the nozzle is manufactured from robust material to stand up to long and arduous service with high reliability. The material has a very high heat conductivity which ensures the heat supply down to the gate. This makes it possible to keep the gate easily open and use a small gate diameter with minimal vestige on the part as a result.
As with all our other bushes it is fully insulated from the mould with our special ceramic material, which has only 7% of the heat conducting capacity of steel.
The rugged longlife heater coil is asymmetrically wound to distribute the heat as uniformly as possible along the bushing. The thermocouple is separate and measures the temperature in the middle of the tube.
All this makes the bushing reliable and suitable for materials that are sensitive to friction and are difficult to inject.
Can be used in a single-cavity or multi cavity version, together with Heatlock standard manifolds or a custom made conventional manifold that is ceramically insulated.

NPT3

Bussningen för direktintag där endast den minimala intagsresten blir synlig på detaljen. Konstruktionen av bussningens spets och utformningen av flytkanalens profil har utformats så att man åstadkommer en maximal temperaturöverföring ned till intaget samtidigt som materialet utsätts för så lite påverkan som möjligt.
Bussningens spets är tillverkad i ett material som har hög hållfasthet för att tåla en lång och hård användning med hög tillförlitlighet. Materialet som har en mycket hög värmeledningsförmåga gör att temperaturen vid intagspunkten hålls på en hög nivå så att intaget lätt kan hållas öppet. Intagsresten blir därigenom mycket minimal då mycket små intagsdiametrar kan användas.
Den är liksom alla våra andra bussningar helt isolerad från formen med vårt speciella keramiska material som endast har 7 % av stålets värmeledningförmåga. Det robusta spiralelementet som har lång livslängd, är olikformigt lindat för att ge en så jämn värmefördelning som möjligt längs bussningen. Avkännaren är separat och mäter temperaturen mitt på röret.
Allt detta gör bussningen tillförlitlig, lämplig även för friktionskänsliga och svårsprutade material.
Kan användas i enfacks- eller i flerfacksutförande tillsammans med en keramiskt isolerad varmkanalbalk.

more ▶

This Heatlock series, below, is currently being replaced by the A1-series of nozzles.
Before you design check availability, stock is gradually decreased.
Spare parts will be available until at least end of 2007 (apart form NPT1 bodies)

NPT3

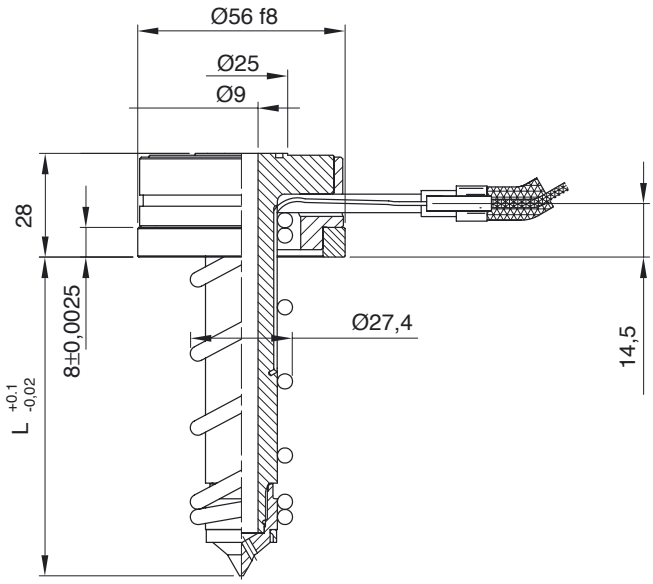

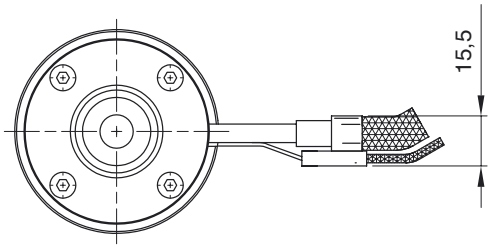

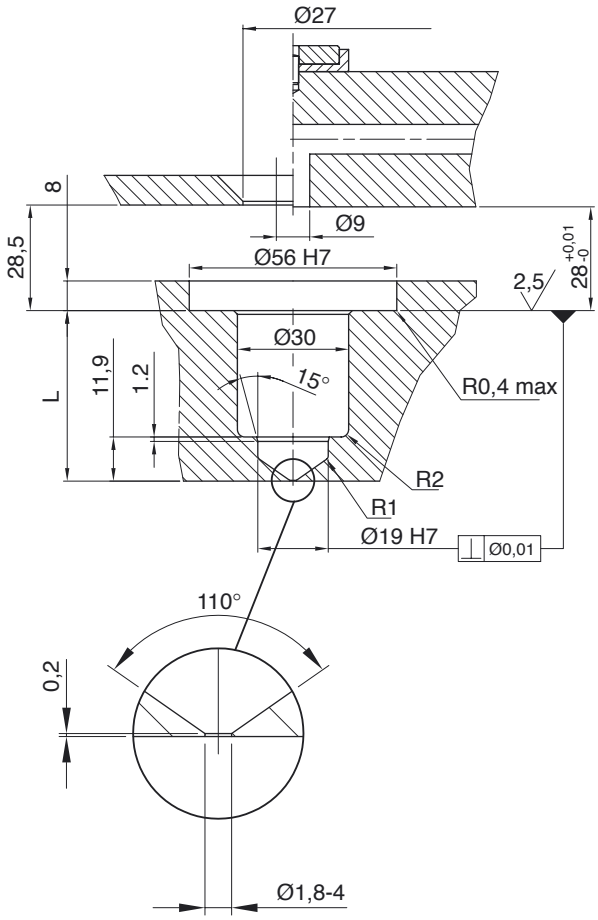

"L" mm	Part No.		Total volume of feed channel in mm³
	Single-cav.	Multi-cav.*	
46	NPT3046411	NPT3046412	4121
66	NPT3066411	NPT3066412	5393
86	NPT3086411	NPT3086412	6665
116	NPT3116411	NPT3116412	8572
146	NPT3146411	NPT3146412	10480
176	NPT3176411	NPT3176412	12387

* with O-ring 630

Can be controlled with various types of temperature controllers intended for hot runner systems with 220/240 V using thermocouple of type Fe-CuNi.

Recommended for the following maximum shot weights:	
Low-viscosity plastic (PS,PE,PP)	1000g
Med.-viscosity plastic (ABS,SAN, PA,POM)	500g
High-viscosity plastic (PC,PMMA, Noryl, Filled material)	300g

Length expansion at: °C="L"+X,xx

°C	46	66	86	116	146	176
200	0,11	0,15	0,20	0,27	0,34	0,40
250	0,13	0,19	0,25	0,33	0,42	0,51
300	0,16	0,23	0,30	0,40	0,50	0,61
350	0,19	0,27	0,35	0,47	0,59	0,71

To ensure minimum vestige on the part, measure the actual "L" measurement on each bush, add the length expansion according to the table to get the hole depth ("L"+X,xx) to be drilled in the cavity plate.

Före inbyggnad, mät upp bussningens nominella "L"-mått, lägg därefter till längdutvidgningen så att bussningens spets ligger exakt vid intagspunkten i uppvärmt tillstånd.

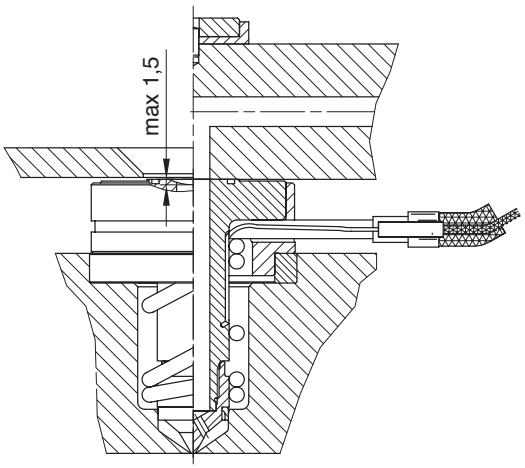

more ▶

Date: 031029, © LKM Heatlock Co Ltd

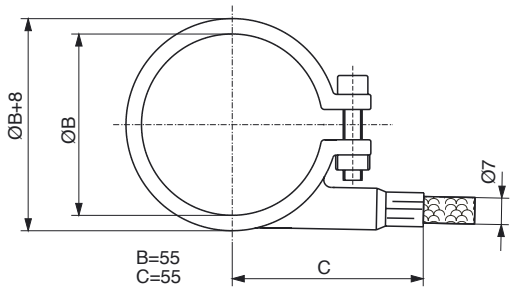

Part No.	Watt	Polarity
B055020180	180	no t/c

When temperatures of 250-260°C and above are needed it may be advantegous to install a band heater at the back end together with thermocouple (TC00240000). This is also the case when shear sensitive materials are to be molded.

Används när en jämn temperatur längs hela bussningen eftersträvas. Då tillsammans med ett termoelement (TC00240000).

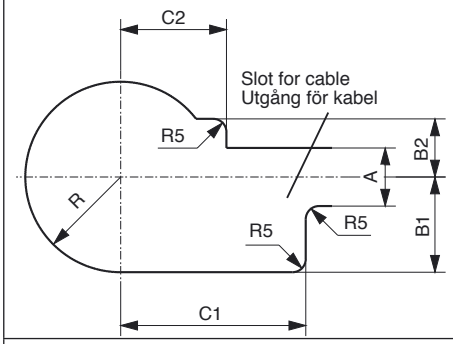

Part No.	R	A	B1	B2	C1	C2
Bush	28	22	-	-	-	-
B055020180	40	22	42	22	85	45

Cavity instructions for bushes with or without bandheater B055020180.

Håltagning för bussning med eller utan bandelement B055020180.

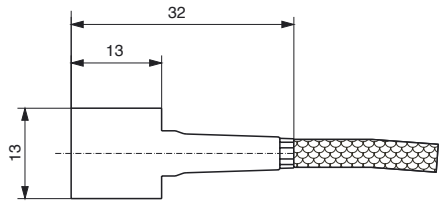

Part No.	Polarity
TC00240000	Black (red) +

Thermocouple used between bandheaters and sprue bush. Measures temperatures up to +400°C. The blade is made of copper and can be contoured to various shapes.

Termogivare för användning mellan bandelement och bussning. Mäter temperaturer upp till +400°C. Bladet är gjort av koppar och kan bearbetas till olika former.

Prior to any assembly refer to our latest assembly instruction, always available on our web site www.heatlock.com

more ▶

This Heatlock series, below, is currently being replaced by the A1-series of nozzles.
Before you design check availability, stock is gradually decreased.
Spare parts will be available until at least end of 2007 (apart form NPT1 bodies)

NPT3

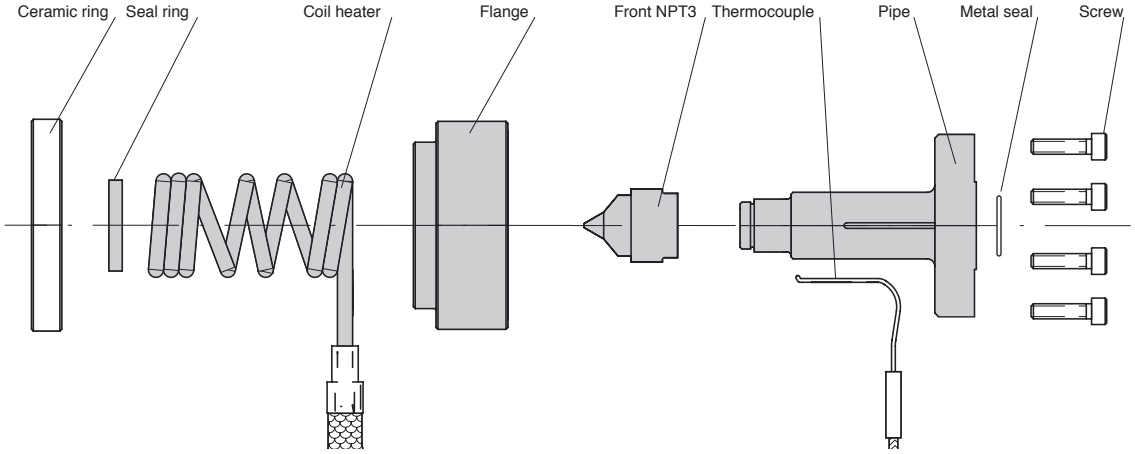

NPT3	Pipe	Coil heater	Thermo-couple	Seal ring	Metal seal	Flange	Ceramic ring	Srew 4 pcs.	Front NPT3
NPT3046411	SBBP304630	C190550335	TC00140200	NPTP3SR000	–	ESBP398210	KEM05604408	MC6S04X012	NPTF300010
NPT3046412	SBBP304630	C190550335	TC00140200	NPTP3SR000	ORING00630	ESBP398210	KEM05604408	MC6S04X012	NPTF300010
NPT3066411	SBBP306630	C190750335	TC00140210	NPTP3SR000	–	ESBP398210	KEM05604408	MC6S04X012	NPTF300010
NPT3066412	SBBP306630	C190750335	TC00140210	NPTP3SR000	ORING00630	ESBP398210	KEM05604408	MC6S04X012	NPTF300010
NPT3086411	SBBP308630	C190950560	TC00140210	NPTP3SR000	–	ESBP398210	KEM05604408	MC6S04X012	NPTF300010
NPT3086412	SBBP308630	C190950560	TC00140210	NPTP3SR000	ORING00630	ESBP398210	KEM05604408	MC6S04X012	NPTF300010
NPT3116411	SBBP311630	C191250560	TC00140220	NPTP3SR000	–	ESBP398210	KEM05604408	MC6S04X012	NPTF300010
NPT3116412	SBBP311630	C191250560	TC00140220	NPTP3SR000	ORING00630	ESBP398210	KEM05604408	MC6S04X012	NPTF300010
NPT3146411	SBBP314630	C191550835	TC00140230	NPTP3SR000	–	ESBP398210	KEM05604408	MC6S04X012	NPTF300010
NPT3146412	SBBP314630	C191550835	TC00140230	NPTP3SR000	ORING00630	ESBP398210	KEM05604408	MC6S04X012	NPTF300010
NPT3176411	SBBP317630	C191850835	TC00140250	NPTP3SR000	–	ESBP398210	KEM05604408	MC6S04X012	NPTF300010
NPT3176412	SBBP317630	C191850835	TC00140250	NPTP3SR000	ORING00630	ESBP398210	KEM05604408	MC6S04X012	NPTF300010

Date: 031029, © LKM Heatlock Co Ltd

Heatlock TOP2, Torpedo tip

Features

- Replaceable heater.
- The torpedo is centered in the mould half. The tip is always correctly positioned in the gate.
- The heated torpedo is thermally insulated from the mould.
- There is no metal-to-metal contact between the torpedo tip and the mould; this minimizes cooling of the tip.

Egenskaper

- Värmepatronen är utbytbar.
- Ingen metallisk kontakt mellan torpedspets och formstål ger minsta möjliga avkylning av spetsen.
- Den uppvärmda torpeden är värmeisolerad från den kalla formen.
- Torpeden är centrerad i formhalvan. Spetsen får alltid rätt läge i förhållande till intaget.

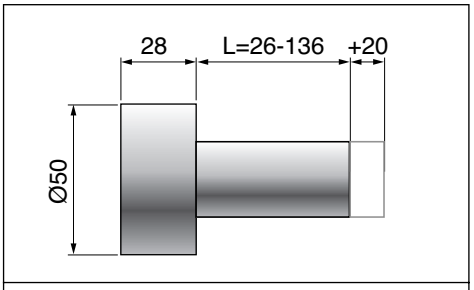

Shot weights <80 g

TOP2

gives you possibilities with simple means build a mould for direct gating. The gate is made in the cavity plate so it can be used on surfaces that presented difficulties, ie. sloping surfaces.
Since the torpedo body is centred in the mould half and the melt flow is always along the torpedo length the tip will always be centred in the gate.The internal heater, which is replaceable, measures the temperature in the tip of the heater in order to provide good control over the gate area and give a minimal residue.
The torpedo is available with a special surface, TIN, for injecting glass filled plastics.
Tested with materials like glass filled PC, Polyurethane and ABS with flame resistance.
Can be used in single-cavity or multi-cavity applications, together with Heatlock standard manifolds or a custom made conventional manifold that is ceramically insulated.

TOP2

ger dig möjlighet att på ett enkelt sätt bygga ditt verktyg med direkt intag. Eftersom intaget görs direkt i formplatttan kan man spruta in på ställen som normalt sett är besvärliga att placera ett intag på. Intagsresten blir minimal.
Genom att välja en konstruktion där torpedkroppen centrerats i formplattan och materialflödet flyter längs torpedens längdaxel är Torpedspetsen alltid centrerad i intaget samtidigt som man undviker fickor där material blir stående.
Den invändiga värmepatronen som är utbytbar, har avkännaren placerad i spetsen för att kunna kontrollera intagets temperatur så noga som möjligt och därigenom minimera intagsresten.
Torpeden kan levereras med en speciell ytbehandling, TIN för t.ex. sprutning av glasfiber-fyllda plaster.
Provad med material som glasklar resp. glasfiberfylld PC, Polyuretan och ABS med flamskyddsmedel.
Kan användas i enfacksmontering såväl som flerfacksverktyg, då antingen ihop med vårt helt isolerade fördelarsystem eller med en konventionell varmkanalbalk också den keramiskt isolerad..
Vi erbjuder en svensktillverkad kvalitetsprodukt till ett pris som vi säkert tror Du skall finna intressant.

more ▶

This Heatlock series, below, is currently being replaced by the A1-series of nozzles.
Before you design check availability, stock is gradually decreased.
Spare parts will be available until at least end of 2007 (apart form NPT1 bodies)

TOP2

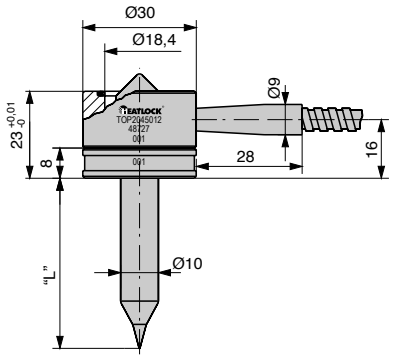

"L" mm	Part No.	
	Standard	TIN-coated tip
Single cavity including end cap bandheater and ceramic ring		
30	TOP2030011	TOP2030031
45	TOP2045011	TOP2045031
57	TOP2057011	TOP2057031
70	TOP2070011	TOP2070031
83	TOP2083011	TOP2083031
Multi-cavity all with O-ring 630		
30	TOP2030012	TOP2030032
45	TOP2045012	TOP2045032
57	TOP2057012	TOP2057032
70	TOP2070012	TOP2070032
83	TOP2083012	TOP2083032

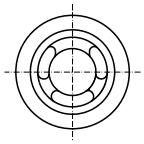

Can be controlled with various types of temperature controllers intended for hot runner systems with 220/240 V using thermocouple of type Fe-CuNi.	
Recommended for the following maximum shot weights:	
Low-viscosity plastic (PS,PE,PP)	80g
Med.-viscosity plastic (ABS,SAN, PA,POM)	40g
High-viscosity plastic (PC,PMMA, Noryl, Filled material)	30g
Can be used with a gate diameter of Ø0.6-3.0 mm.	

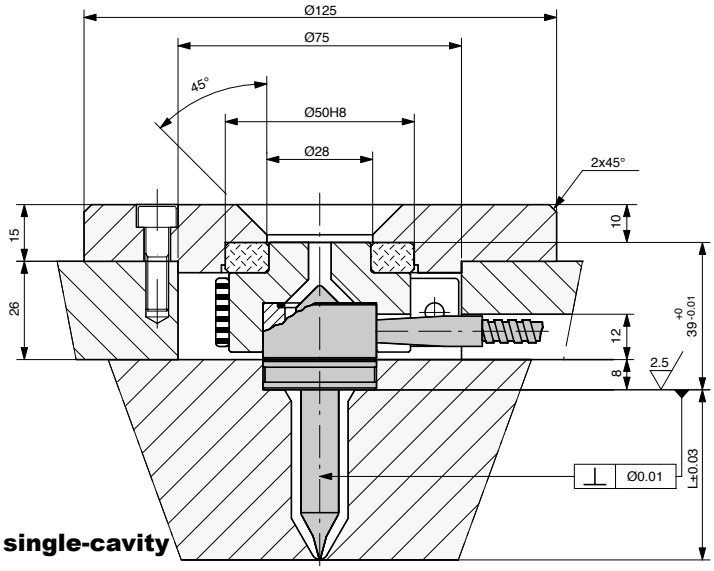

single-cavity

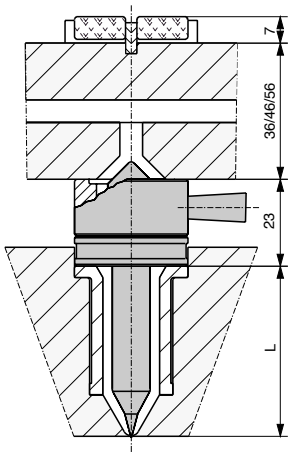

multi-cavity

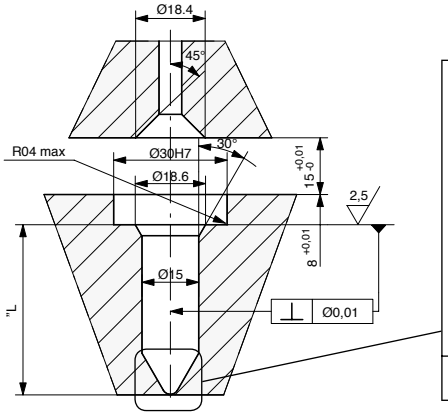

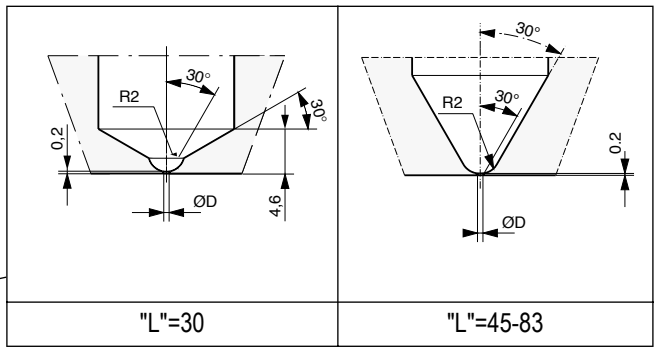

more ▶

Date: 031002, © LKM Heatlock Co Ltd

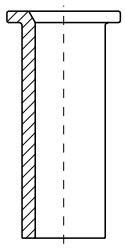

Insulating sleeve for torpedo

The insulating sleeve insulates the flow channel around the torpedo tip from the mould plate, so that the flow gap around the torpedo increases. This makes it possible to inject materials that requires a high mass temperature, as well as filled materials.
The insulating sleeve is supplied as shown in fig. and fits torpedoes with L=30-70 mm. Work the sleeve as described in the assembly instruction.

Isolerhylsa för Heatlock Torped TOP2

Isolerar flytkanalen runt torpedspetsen från formplattan. Detta minskar avkylningen av flytkanalen så att den flytbara spalten runt torpeden ökar. Formsprutning av material som kräver hög massatemperatur, och fyllda material blir härigenom möjlig.
Isolerhylsan levereras enligt fig, och passar till torpeder med L=30–70mm. Bearbeta hylsan enligt monteringsanvisningen.

Part No.	Description
TOPPH07230	Insulation sleeve

Prior to any assembly refer to our latest assembly instruction, always available on our web site www.heatlock.com

more ▶

This Heatlock series, below, is currently being replaced by the A1-series of nozzles.
Before you design check availability, stock is gradually decreased.
Spare parts will be available until at least end of 2007 (apart form NPT1 bodies)

TOP2

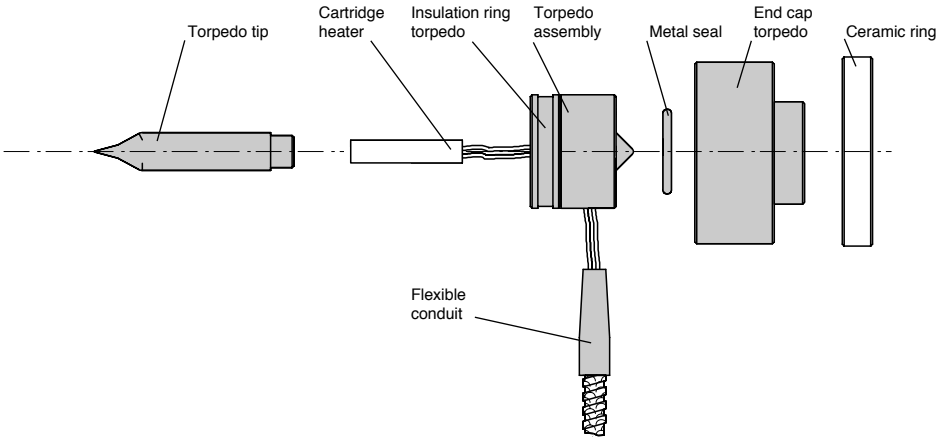

TOP2	Torpedo assem.	(Torpedo assembled includes the 4 comp. below)				Heater band	Ceramic ring	Metal seal	Insul. ring torpedo	End cap torpedo
		Cartridge h.	Flex. cond.	Torpedo tip	Assembly					
TOP2030011	TOPP203050	T060300080	TOPP060850	TOPP203040	TOPP296100	B048020180	KE05002708	ORING00630	TOPP296150	TOPPBH3048
TOP2030012	TOPP203050	T060300080	TOPP060850	TOPP203040	TOPP296100	–	–	ORING00630	TOPP296150	–
TOP2045011	TOPP204550	T060380120	TOPP060850	TOPP204540	TOPP296100	B048020180	KE05002708	ORING00630	TOPP296150	TOPPBH3048
TOP2045012	TOPP204550	T060380120	TOPP060850	TOPP204540	TOPP296100	–	–	ORING00630	TOPP296150	–
TOP2057011	TOPP205750	T060500160	TOPP060850	TOPP205740	TOPP296100	B048020180	KE05002708	ORING00630	TOPP296150	TOPPBH3048
TOP2057012	TOPP205750	T060500160	TOPP060850	TOPP205740	TOPP296100	–	–	ORING00630	TOPP296150	–
TOP2070011	TOPP207050	T060650200	TOPP060850	TOPP207040	TOPP296100	B048020180	KE05002708	ORING00630	TOPP296150	TOPPBH3048
TOP2070012	TOPP207050	T060650200	TOPP060850	TOPP207040	TOPP296100	–	–	ORING00630	TOPP296150	–
TOP2083011	TOPP208350	T060750250	TOPP060850	TOPP208340	TOPP296100	B048020180	KE05002708	ORING00630	TOPP296150	TOPPBH3048
TOP2083012	TOPP208350	T060750250	TOPP060850	TOPP208340	TOPP296100	–	–	ORING00630	TOPP296150	–

Date: 031002, © LKM Heatlock Co Ltd

This Heatlock series, below, is currently being replaced by the A1-series of nozzles.
Before you design these cartridges into your equipment, consult us.
Availability is expected to gradually decreased.
Spare parts will be available until at least end of 2007 (apart form NPT1 bodies)

High Efficiency Cartridge Heaters.

Completely flexible cables. Cable length 305-1000 mm. Casing of stainless steel. For temperatures up to 760 °C. Calibrated outer casing for maximal heat transfer. Voltage, unless otherwise stated : 240V. Tolerance on diameter -0,03, -0,13.
Dimensions in stock. Other sizes and efficiencies can be supplied to order.

Working temperature max. 300°C.

Art. nr.	Dimension	Watt
H060500175	1/4x50mm	175W
H060750200	1/4x75mm	200W
H061000300	1/4x100mm	300W
H061250305	1/4x125mm	305W
H090380150	3/8x38mm	150W
H090500150	3/8x50mm	150W
H090500250	3/8x50mm	250W
H090750260	3/8x75mm	260W
H090750400	3/8x75mm	400W
H091000350	3/8x100mm	350W
H091000500	3/8x100mm	500W
H091250500	3/8x125mm	500W
H091500600	3/8x150mm	600W
H091750600	3/8x175mm	600W
H120500400	1/2X50mm	400W
H120650500	1/2x65mm	500W
H120750535	1/2x75mm	535W
H121500735	1/2x150mm	735W
H121751000	1/2x175mm	1000W
H122001000	1/2x200mm	1000W
H150500250	5/8x50mm	250W
H150750600	5/8x75mm	600W
H151000600	5/8x100mm	600W
H151250620	5/8x125mm	620W

High efficiency heating cartridges with differential winding of the resistance wire.

Completely flexible cables, cable length 610 mm. Differential winding of resistance wire on cartridges over 3" gives most even temperature along its length. Calibrated outer casing for maximal heat transfer.
Voltage unless otherwise specified: 240V
Tolerances on diameter: -0,025, -0,127. Specially for hot runner plates.
Dimensions in stock. Other sizes and efficiencies can be supplied to order.

Working temperature max. 300°C.

Art. nr.	Dimension	Watt
S060380175	1/4x38	175w
S090850315	3/8X85 MM	315 W
S090950350	3/8X95 MM	350 W
S091150420	3/8x115mm	420W
S091400525	3/8x140mm	525W
S091500575	3/8x150mm	575W
S091650625	3/8x165mm	625W
S092000775	3/8x200mm	775W
S092500990	3/8x250mm	990W
S121000490	1/2x100mm	490W
S121150550	12.7x115mm	550W
S121250625	1/2x125mm	625W
S121400700	1/2x140mm	700W
S121500775	1/2x150mm	775W
S121650850	1/2x165mm	850W
S121750900	1/2x175mm	900W
S121900975	1/2x190mm	975W
S122151100	1/2x215mm	1100W
S122301175	1/2x230mm	1175W
S122401250	1/2x240mm	1250W
S122501325	1/2x250mm	1325W
S122651400	1/2x265mm	1400W
S122901525	1/2x290mm	1525W
S124302200	1/2x430mm	2200W
S163052000	5/8x305mms	2000W

This Heatlock series, below, is currently being replaced by the A1-series of nozzles.
Before you design check availability, stock is gradually decreased.
Spare parts will be available until at least end of 2007 (apart form NPT1 bodies)

Heating cartridges with thermocouple.

Completely flexible cables, cable length 915 mm. Differential winding of resistance wire on cartridges over 3" gives most even temperature along its length. Calibrated outer casing for maximal heat transfer.
Voltage unless otherwise specified: 240V. Dimensions in inches.
Tolerances on diameter: -0,025, -0,127.
Working temperature max. 300°C.
Stocked dimensions. Other dimensions can be ordered.

Art. nr.	Type	Dimension	Watt
T060280150	TJ14011	1/4x 1 1/8	150W
T060300080	TJ14012	1/4x30mm	80W
T060380120	TJ14015	1/4x1 1/2	120W
T060380175	TJ14015	1/4x1 1/2	175W
T060500160	TJ14020	1/4x2	160W
T060500200	TJ14020	1/4x2	200W
T060650200	TJ14025	1/4x2 1/2	200W
T060750250	TJ14030	1/4x3	250W
T060750300	TJ14030	1/4x3	300W
T061000400	TJ14040	1/4x4	400W
T090300175	TJ38012	3/8x1 1/4	175W
T090380150	TJ38015	3/8x1 1/2	150W
T090380200	TJ38015	3/8x1 1/2	200W
T090450200	TJ38017	3/8x1 3/4	200W
T090500150	TJ38020	3/8x50mm	150W
T090500250	TJ38020	3/8x2	250W
T090650250	TJ38025	3/8x2 1/2	250W
T090750260	TJ38030	3/8x3	260W
T090900320	TJ38035	3/8x3 1/2	320W
T091000370	TJ38040	3/8x4	370W
T091150420	TJ38045	3/8x4 1/2	420W
T091250470	TJ38050	3/8x5	470W
T091400525	TJ38055	3/8x5 1/2	525W
T091500575	TJ38060	3/8x6	575W
T091800675	TJ38070	3/8x7	675W
T092500990	TJ38100	3/8x10	990W
T120500250	TJ12020	1/2x2	250W
T120650280	TJ12025	1/2x2 1/2	280W
T120750600	TJ12030	1/2x3	600W
T120900420	TJ12035	1/2x3 1/2	420W
T121150550	TJ12045	1/2x4 1/2	550W
T121250625	TJ12050	1/2x5	625W
T121400700	TJ12055	1/2x5 1/2	700W
T121500675	TJ12060	1/2x6	675W
T121800900	TJ12070	1/2x7	900W
T121900975	TJ12075	1/2x7 1/2	975W
T122501325	TJ12100	1/2x250mm	1325W
T124202200	TJ12165	1/2x16 1/2	2200W
T124952875	TJ12195	1/2x19 1/2	2875W

Glass fibre hose, tape

(FOR PROTECTION OF ELECTRIC CABLES)

Art. nr.	Dimension	
GLAS924400	Ø 4x0.8 mm	Hose
GLAS924410	Ø 5X0.38 mm	Hose
GLAS927999	1/2"x20m	Tape

Date: 031002, © LKM Heatlock Co Ltd

Coilheater / Spiralelement

Coilheater
Unevenly wound to give a more even heat supply along the bushings length. Without built-in thermo-couple. Voltage 240 V. Each heater is separately tested when produced to ensure high quality. The dimension of the resitance wire is made so it will not be damaged even if the heater is used with maximum power constantly.
The length can be adjusted if needed by pulling the heater.

Spiralelement
Utformad med olikformig lindning för jämnare värmefördelning.
Utan inbyggd avkännare, 240 V. Längden kan dras ut vid behov.

Part No.	I. Ø	Length	wattage	To Bush L=
C080330125	8.5	33	125	26(+10)-S1
C080430125	8.5	43	125	36(+10)-S1
C080530180	8.5	53	180	46(+10)-S1
C080930240	8.5	93	240	86(+10)-S1
C081130280	8.5	113	280	116(+10)-S1
C120360200	12.7	36	200	26(+20)-S2
C120560315	12.7	56	315	46(+20)-S2
C120760400	12.7	76	400	66(+20)-S2
C120960400	12.7	96	400	86(+20)-S2
C121160500	12.7	116	500	106(+20)-S2
C121460500	12.7	146	500	136(+20)-S2
C190550335	19.4	55	335	46(+20)-S3
C190750335	19.4	75	335	66(+20)-S3
C190950560	19.4	95	560	86(+20)-S3
C191250560	19.4	125	560	116(+20)-S3
C191550835	19.4	155	835	146(+20)-S3
C191850835	19.4	185	630	176(+20)-S3
C250800630	25.4	80	630	75(+20)-S4
C251050630	25.4	105	630	100(+20)-S4
C251300790	25.4	130	790	125(+20)-S4
C251550790	25.4	155	790	150(+20)-S4
C251800950	25.4	180	950	175(+20)-S4
C252050950	25.4	205	950	200(+20)-S4

Bandheaters: Length of wires 950 mm. Voltage 230 V.

B048020180 - B055020180 - B060020180 without thermocouple

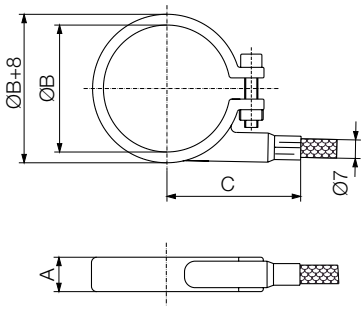

Part No.	Dimension	Wattage	A	B	C
B048020180	48x18 mm	180W	18	48	43
B055020180	55x18 mm	180W	18	55	55
B060020180	60x18 mm	180W	18	60	55

Boring for band heaters.

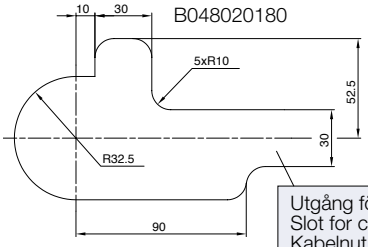

Utgång för kabel
Slot for cable
Kabelnut

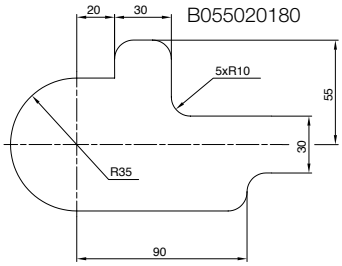

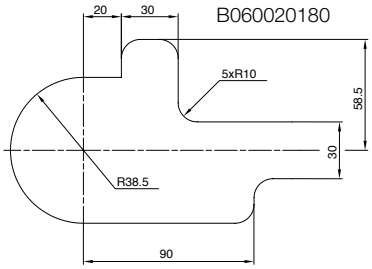

B028013180 - B047015315 - B060015315 with thermocouple, Black + (Red)

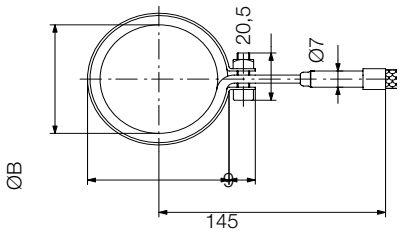

Part No.	Dimension	Wattage	A	B	C
B028013180	28x13 mm	180W	13	28	-
B047015315	47x15 mm	315W	15	47	-
B060015315	60x15 mm	315W	15	60	-

Boring for band heaters.

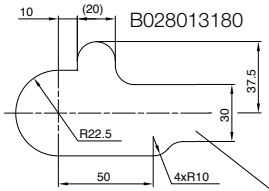

Utgång för kabel
Slot for cable
Kabelnut

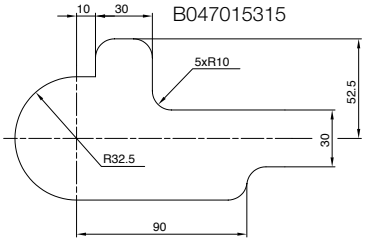

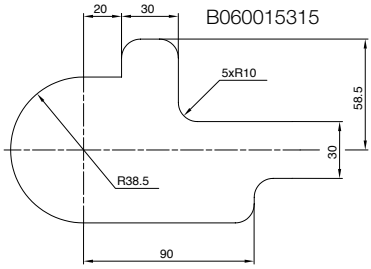

B030018100 with thermocouple, Black + (Red)

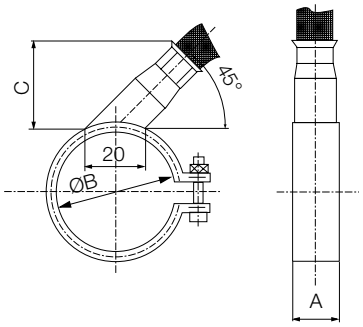

Part No.	Dimension	Wattage	A	B	C
B030018100	30x17 mm	100W	17	30	25

Boring for band heaters.

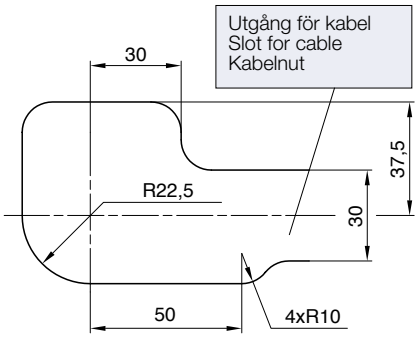

Utgång för kabel
Slot for cable
Kabelnut

Date: 031002, © LKM Heatlock Co Ltd

Thermocouples

Themocouples for accurate measuring of temperature in moulds for injection moulding. All thermocouples are of J–Type and have grounded junctions.
Lead wires are protected by a rugged stainless steel braided cover. Length of cables 900 mm.

Connect:

—Black (Red) to the positive pole (+)
—White (Black)to the negative pole (–)

Used between bandheaters and sprue bush or in applications where space will not permit any round type of thermocouple. Measures temperatures up to 400°C. The blade is made of copper and can be contoured to various shapes.

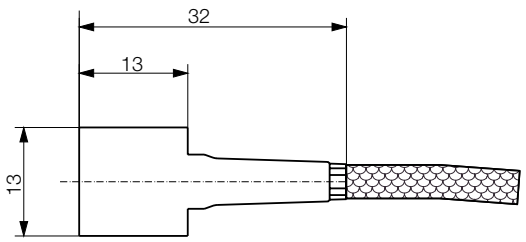

Part No.	TC00240000

Used to measure temperatures on i.e. manifolds. Measures the temperature in the tip of the tube. (400°C)
Drill the hole for the thermocouple 1 mm shorter than the L–measurment to insure good contact at the measuring point.

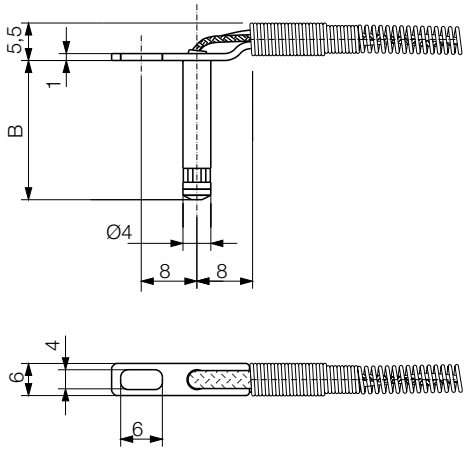

Part No.	L
TC00040180	12
TC00040185	20

Thin thermocouple used to measure the temperature on our Heatlock bushes. The thermocouple is protected by a capton tube. It measures in the tip of the tube. The tube can be bent with an radius of min. 3mm. Measures temperatures up to 800°C. The 4 mm Ø-base can withstand temperatures up to max. 260°C.

L	Part No.
45	TC00140195
55	TC00140200
75	TC00140210
100	TC00140220
110	TC00140230
160	TC00140250
210	TC00140270
260	TC00140290

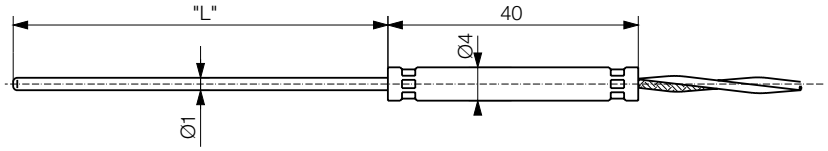

O-rings of stainless steel

To seal the joints of hot runner systems. The O-ring is made of a stainless steel pipe and gives when built in according to the instructions a seal proof joint. A hole on the inside diameter of the tubular ring increases the internal pressure of the O-ring, when the plastic flow channel is filled with melted plastic material. This helps to increase the O-rings sealing capacity.

Part No.	I.Ø mm	O.Ø mm
ORING00500	9,56	12,70
ORING00608	11,10	14,27
ORING00610	14,27	17,45
ORING00615	15,90	19,05
ORING00620	17,45	20,65
ORING00630	19,05	22,23
ORING00640	23,80	26,97
ORING00645	25,43	28,58
ORING00650	26,97	30,18

Boring instructions for O-rings.

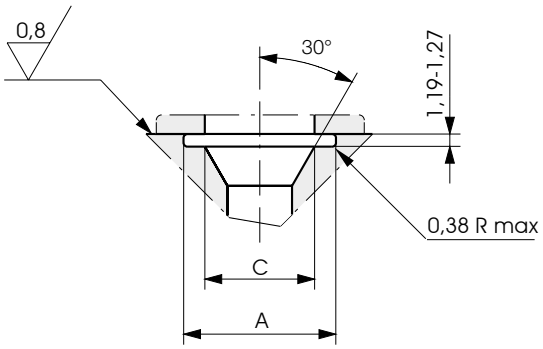

Part No.	A $^{+0.1}_{-0.0}$	C
ORING00500	12,83	8,89
ORING00608	14,40	10,46
ORING00610	17,59	13,65
ORING00615	19,18	15,24
ORING00620	20,76	16,83
ORING00630	22,35	18,42
ORING00640	27,15	23,16
ORING00645	28,70	24,76
ORING00650	30,29	26,35

Date: 031002, © LKM Heatlock Co Ltd

Save Money –Ceramics

The diagram shows the different heat losses of the manifold to the mould of in one case supported by 4 iron spacers and in the other with 4 ceramic spacers of same dimensions . In our case the contact surface of the spacers was 450 mm^2.
The result shows a difference of 0,33Wh/mm^2 between steel and ceramics. Ceramics save 0,33Wh for every mm^2 of contact surface as respects to steel each working hour.

Example:
our ceramic spacers KE0200305 (surface=490 mm^2) save approx. 160 Wh when compared with steel.

Summerising:
- remarkable energy saving.
- less heat loss in mould means less work for your chiller.

Spara pengar med keramik

Diagrammet visar skillnader i värmeförlust från varmkanalbalk till fästplatta. Jämförelsen bygger på, i ena fallet 4 stödkutsar i stål och i andra fallet 4 stödkutsar i keramik i samma dimensioner.
Kontaktytan var 450 mm^2.
Resultatet visar en skillnad av 0,33 Wh/mm^2 mellan stål och keramik, där keramiken alltså sparar 0,33 Wh för varje mm^2 av kontaktytan jämfört med stål.

Ett exempel:
Vår KE0200305 (kontaktyta=490 mm^2) sparar ungefär 160 Wh jämfört med stål.

Summering:
- Påtaglig energibesparing
- Mindre värmeförlust till verktyget kräver mindre kylning.

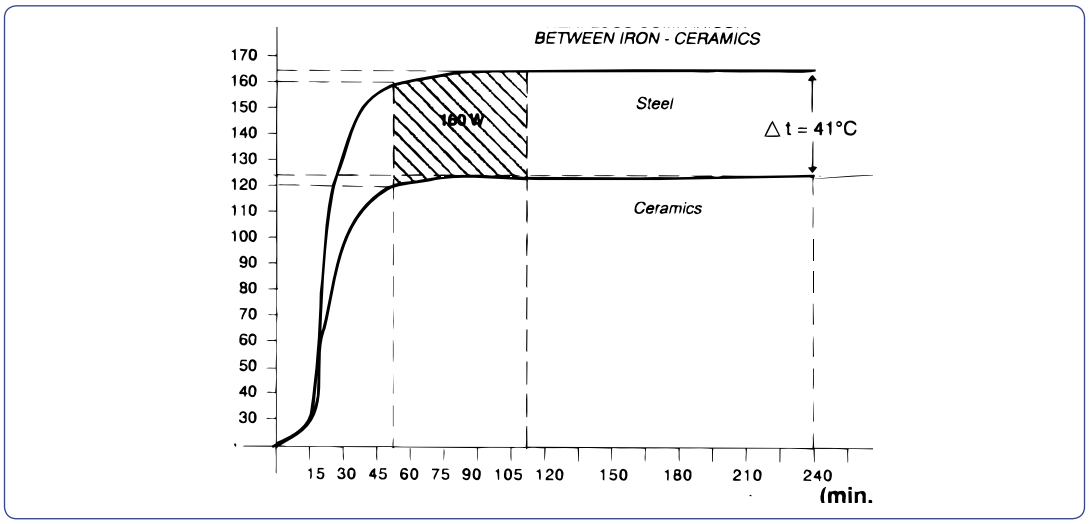

This Heatlock series, below, is currently being replaced by the A1-series of nozzles.
Before you design check availability, stock is gradually decreased.
Spare parts will be available until at least end of 2007 (apart form NPT1 bodies)

Micro Ceramic with tolerances within ±2,5 µm

The new “Micro” series are all supplied with a build up tolerance within ±2,5 µm. This makes them suitable for the high cavitation market where tight tolerances are needed in order to make the hot runner systems leak free. This new series also makes the ceramic insulator exchangeable in multi cavity moulds.

Heat transfer capacity is around 2-3 of a certain value where titanium is 14-15 and stainless steel is 22-24.

Since temperature is kept within the heated parts, the energy-losses from hot-runner to the mould are reduced. Tests done comparing the energy losses between steel spacers and ceramic spacers show an energy saving of 0,33 Wh/sqmm contact surface.

Micro Keramik med tolerans av ±2,5 µm

Vår nya serie "Micro" keramik där inbyggnadshöjden på samtliga artiklar ligger en tolerans av +/- 2,5 (my)m.
Detta gör dom speciellt användbara till varmkanalverktyg med många bussningar, där kraven på inbyggnaden för att verktyget skall vara läckage fritt är mycket höga. Den snäva toleranser gör också att keramiken är utbytbar i flerfack-verktyg.

Kvalitén är väl beprövad, den har en tryckhållfasthet på 2100 N7sqmm och tål temperaturer på upp till 1400 gr C. Värmeledningsförmågan är omkring 2-3 av ett speciellt värde. Jämförande siffror för rostfritt material ligger på 22-23 och för titan 14-15. Dessa överlägsna isolations egenskaper gör dem mycket användbara för just att isolera varmkanalsystem.

Date: 031002, © LKM Heatlock Co Ltd

This Heatlock series, below, is currently being replaced by the A1-series of nozzles.
Before you design check availability, stock is gradually decreased.
Spare parts will be available until at least end of 2007 (apart form NPT1 bodies)

Art Nr: KEM03001017

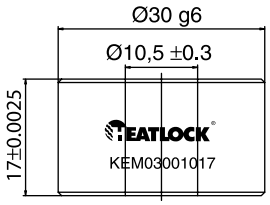

Art Nr: DSP0353010
Centre location spacer

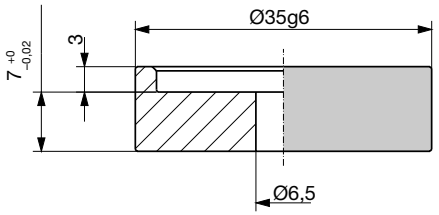

Art Nr: KEM03002308

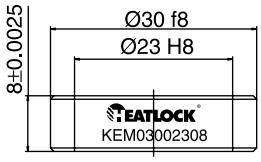

This Micro Ceramic ring fits:

ESB1, PPB1, NPT1 Bushings

Denna Micro keramik ring passar:

ESB1, PPB1, NPT1 Bussningar

Art Nr: KEM030023081

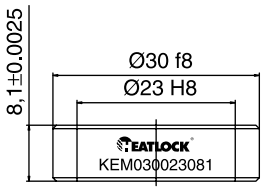

Art Nr: KEM05002708

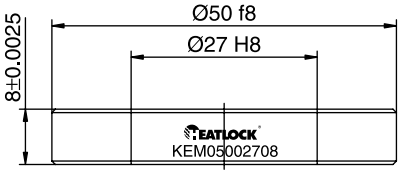

This Micro Ceramic ring fits:

ESB2, PPB2, NPT2 Bushings

Denna Micro keramik ring passar:

ESB2, PPB2, NPT2 Bussningar

Art Nr: KEM05604408

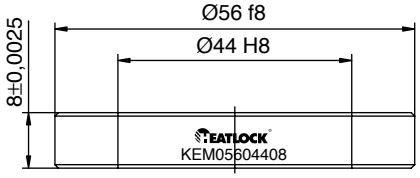

This Micro Ceramic ring fits:

ESB3, PPB3, NPT3 Bushings

Denna Micro keramik ring passar:

ESB3, PPB3, NPT3 Bussningar

Ceramic insulation parts

Ceramic parts specially designed for the plastic industry. Forms a barrier between the hot and cold parts resulting in reduction in heat losses. The main benefit from this is that it will be easier to control and to get even heat on the heated parts. They are produced of an material which has only 7% of the heat conducting capacity of steel.
The ceramic compression strength is 2100 N/mm², and it is capable of withstanding temperatures of about 1400°C. Special design made upon request.

Detaljer av keramik

Materialet har endast c:a 7% av stålets värmeledningsförmåga varför det med fördel kan användas för att isolera kalla och varma detaljer från varandra. Värmeförlusterna minskar härigenom betydligt och det blir lättare att styra värmen i den uppvärmda detaljen.
Materialet har en tryckhållfasthet på 2100N/mm² och en temperaturbeständighet på 1400 °C.
Detaljer med egna mått levereras mot förfrågan.

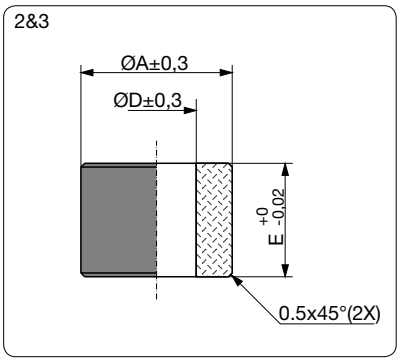

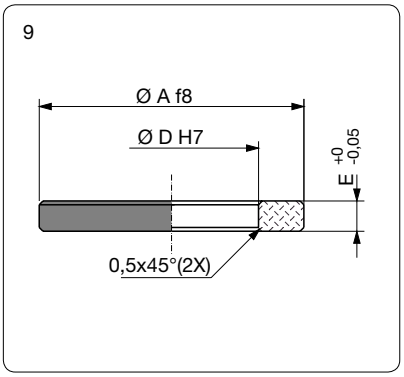

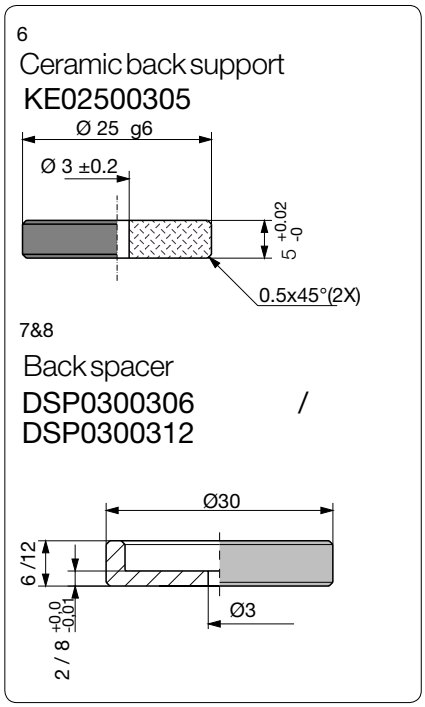

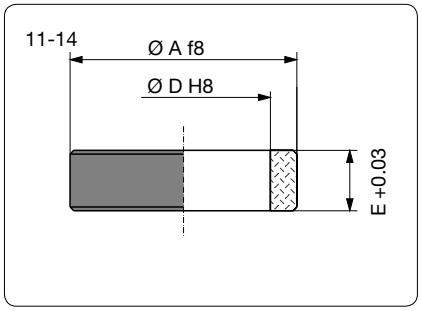

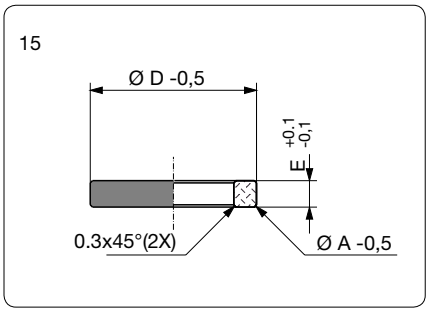

No.	Part No.	Description	ØA	ØD	E
2	KE02001015	Bottom spacer	20	10,5	15
3	KE02001020	Bottom spacer	20	10,5	20
6	KE02500305	Back support	25	3,2	5
7	DSP0300306	Back spacer	30	3	6
8	DSP0300312	Back spacer	30	3	12
9	KE03502304	Insulation ring rear Topless	35	23	4
11	KE04002708	Insulation ring	40	27	8
14	KE06003908	Insulation ring ESB4	62	39	8
15	KE02201603	Insul. ring rear Mini Topless	22	16	3

Date: 031002, © LKM Heatlock Co Ltd

This Heatlock series, below, is currently being replaced by the A1-series of nozzles.
Before you design check availability, stock is gradually decreased.
Spare parts will be available until at least end of 2007 (apart form NPT1 bodies)

Contents / innehåll

Introduction / inledning 4.1.2
Heatlock Manifold Design / Heatlock översikt balk 4.1.3
Heatlock Toolkit 4.1.4
Heatmandoc 4.1.6
Manifold Inserts and Plugs and Seals 4.1.8
Heatlock Manifold Design / Heatlock översikt balk 4.1.9
Manifold assembly / monteringsanvisning 4.1.10

Heatlock Standard Manifold I-type 4.2.1
Heatlock Standard Manifold H-type 4.3.1
Heatlock Standard Manifold X-type 4.4.1
Heatlock Standard Manifold X^2-type 4.5.1

Heatlock Custom Manifold / kundanpassad balk 4.6.1

Manifold Components 4.50.1
Ceramics, Bandheaters, Feedbushes and Purge Guards 4.50.2
Tubular heater MHI / element MHI 4.50.3
Tubular heater MHX / element MHX 4.50.4
Straight Tubular Heater RH / rakt element RH 4.50.5
Cable MHWIRE/ kabel MHWIRE 4.50.6
Thermocouples / Termoelement 4.50.7

This Heatlock series, below, is currently being replaced by the A1-series of nozzles.
Before you design check availability, stock is gradually decreased.
Spare parts will be available until at least end of 2007 (apart form NPT1 bodies)

Contents / innehåll

Introduction / inledning 4.1.2
Heatlock Manifold Design / Heatlock översikt balk 4.1.3
Heatlock Toolkit 4.1.4
Heatmandoc 4.1.6
Manifold Inserts and Plugs and Seals 4.1.8
Heatlock Manifold Design / Heatlock översikt balk 4.1.9
Manifold assembly / monteringsanvisning 4.1.10

Heatlock Standard Manifold I-type 4.2.1
Heatlock Standard Manifold H-type 4.3.1
Heatlock Standard Manifold X-type 4.4.1
Heatlock Standard Manifold X^2-type 4.5.1

Heatlock Custom Manifold / kundanpassad balk 4.6.1

Manifold Components 4.50.1
Ceramics, Bandheaters, Feedbushes and Purge Guards 4.50.2
Tubular heater MHI / element MHI 4.50.3
Tubular heater MHX / element MHX 4.50.4
Straight Tubular Heater RH / rakt element RH 4.50.5
Cable MHWIRE/ kabel MHWIRE 4.50.6
Thermocouples / Termoelement 4.50.7

Heatlock - Setting manifold standards, for manifold design and & application

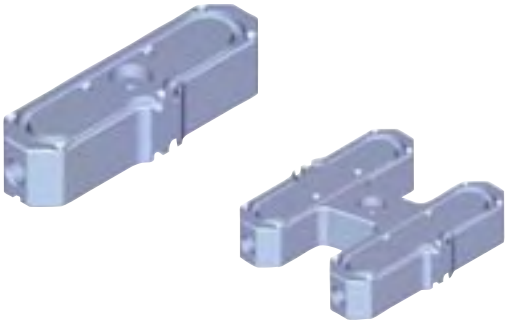

We where the first to introduce ceramic insulation as a standard on hot-runner systems at K83, now do we introduce a new range of manifolds where you are able to choose from up to 300 different manifold executions. All finished to you're requirements making your needs our "STANDARD". Making manifold design not more difficult than designing the pillars and bushes into a mould.

The range compromises I-, H-, X- & X–X-configurations. You can choose between 6 different flow channels, 6-16mm. Heights of the manifolds are 36, 46 & 56mm. All defined with an individual item number, shown in our catalogue, 2D/3D CAD-library and pricelist. Once you determined which item to use, do you only have to specify the spacing between the drops and place the order. All are "custom made" from standard designs and delivered to you within 3 weeks. Faster LE-times, a "MANIFOLD-EXPRESS" service is also available.
All manifolds are produced in a P20 type of steel according to Heatlock's "Q&F" concept; –quality and fast. A concept, which defines all details from order through production until the manifold, is delivered, ensuring quality.

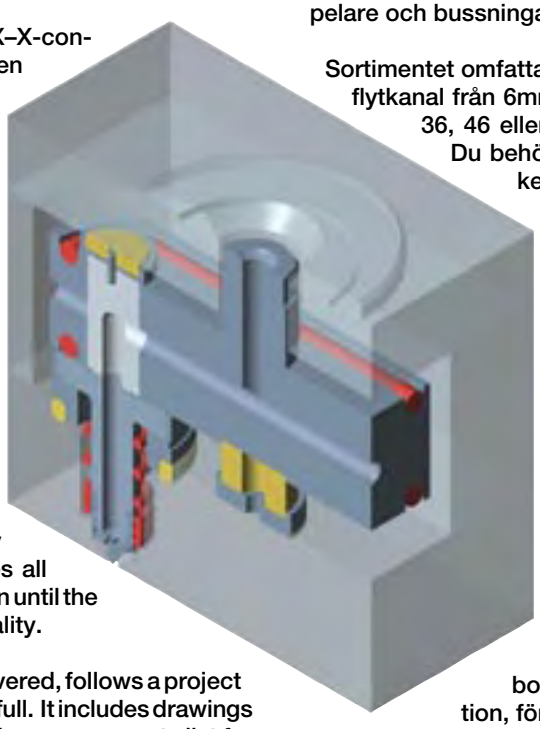

With the manifold system, when delivered, follows a project book, which describes the system in full. It includes drawings of the actual system, wiring instructions, spare parts list for the complete system including the nozzles and assembly instructions in printing or in digital format. Each system is also given an individual project number, this number is of course on the cover of the book and also engraved on the manifold so it can easily be traced if any details at later stage is required.
Parts used for this manifold system is standard parts available from stock, ensuring spare part supply if ever needed.

Heatlock - En ny standard för varmkanalbalkar också när det gäller konstruktion och inbyggnad

Vi var dom första som introducerade keramisk isolation för varmkanalsystem i världen, 1982. Nu introducerar vi ett helt nytt sätt att tänka när det gäller balkar. I vårt standardbalk sortiment har Du upp till 300 olika varianter att välja på! Alla blir dom tillverkade efter Dina önskemål när det gäller mått, vilket gör att Ditt önskemål blir vår standard. Det är inte svårare att rita in ett varmkanalsystem från Heatlock än dom pelare och bussningar Du bestämmer Dig för.

Sortimentet omfattar, I-, H-, X & X-X balkar. Du kan välja flytkanal från 6mm up till 16mm. Höjden på balken är 36, 46 eller 56mm beroende på vilken flytkanal Du behöver. Alla utförande har ett eget artikelnummer, som Du hittar i vår katalog, 2D- eller 3D-bibliotek eller prislistor. Allt detta utan att Du behöver fråga oss om något – Din konstruktion går snabbare. När Du fastställt vilken balk Du behöver specificerar Du det centrum avstånd Du behöver mellan bussningarna. Vi tillverkar då balken utifrån vårt moduluppbyggda standard sortiment för att passa exakt till Dina mått i verktyget. Leveransen sker blixtsnabbt, på 3 veckor, till pris av en standard balk! En snabbare "MANIFOLD-EXPRESS" service finns också om det skall gå undan värre.

Med leveransen av systemet får du en bok som innehåller fullständig specifikation, för installation och framtida spårbarhet. Hela systemet finns beskrivet, ritning med detaljlista, generell installationsritning med inkopplingsschema, reservdelslista för systemet också för dom bussningar som systemet innehåller. På papper och i digitalt format. Varje balk har sitt projekt nummer ingraverat på balkens ovansida, så fort Du lyft bort fästplattan kan Du hitta rätt vilket projekt det är. Har inte Du tillgång till historiken har vi det åt Dig i minst fem år.
Samtliga ingående delar är standard komponenter för snabb leverans från lager, om det mot förmodan skulle behövas.

Date: 031002, © LKM Heatlock Co Ltd

This Heatlock series, below, is currently being replaced by the A1-series of nozzles.
Before you design check availability, stock is gradually decreased.
Spare parts will be available u[illegible] NPT1 bodies)

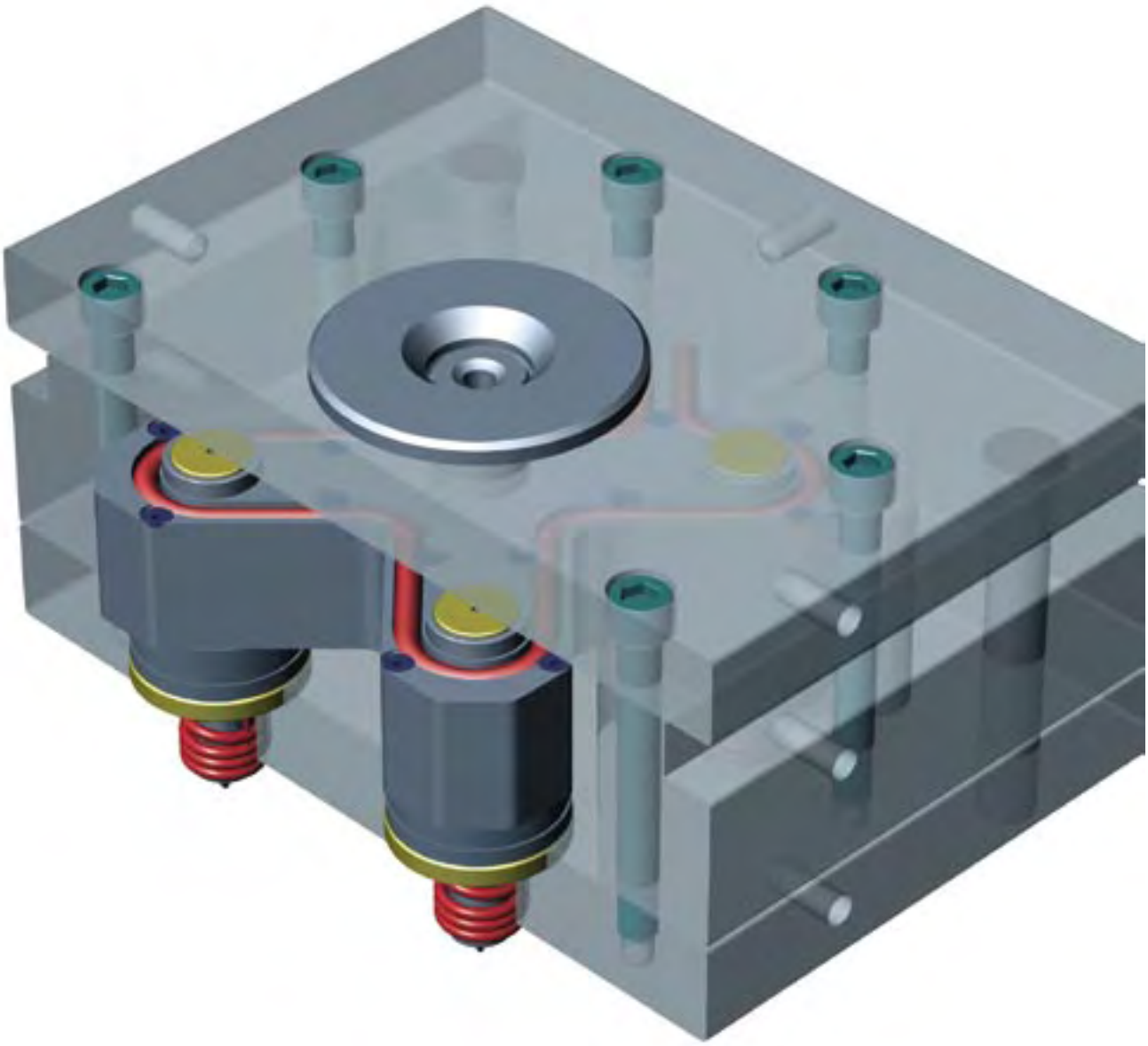

Heatlock – QaF-standard, every detail counted for!

Heatlock's "QaF" concept; –quality and fast. A concept that defines all details from order through production until the manifold is in your hands.

We have simply paid attention to details, a simple rule for success in business. We have looked through every detail from the stage where we get the inquiry from you, quote is made, order is received, order is confirmed, manifold is produced, manifold is delivered all the way for several years of use. No chain is weaker than it's weakest part. We created the chain on paper, wrote manuals for everything step ensuring everyone in the chain act quickly and correct without loosing the Q-touch. Result is we delivered a complete custom built manifold within 3 weeks from our Heatlock manifold "standard".

Heatlock – QaF-standard, där alla detaljer har betydelse!

HEATLOCK QaF-standard; kvalité och snabbhet. Ett koncept vi utvecklat som innefattar allt från att Du placerar Din beställning hos oss tills Du har leveransen hos Dig och lite till!

Vi har helt enkelt försökt tänka på allt, från smått till stort. Verkligen på allt som kan hända, även på det inte får hända och på sådant som skall hända och då fort. Varje timme räknas för att få fram leveransen snabbt med dom höga kvalitets krav vi ställer på våra produkter. Alla detaljer från offert, order, orderbekräftelse, ritningsunderlag och godkännande, produktion av balken, kvalitetskontroll och leverans till Dig har vi haft under lupp ett antal år. Inge länk är starkare än sin svagaste så allt som vi under åren funnit vara viktigt att tänka på finns nedtecknat i en "QaF" manual. Vi kan på detta sätt vara snabba utan att förlora vår "QaF"– kvalitetskänsla. Resultatet är att Du får en balk tillverkad efter Dina önskemål med vår "standard" på 3 veckor efter order.

This Heatlock series, below, is currently being replaced by the A1-series of nozzles.
Before you design check availability, stock is gradually decreased.
Spare parts will be available until at least end of 2007 (except form NPT1 bodies)

Heatlock Toolkit

- **Design a hot-runner system in a flash**
- **Easy navigation system**
- **Available in all common file formats**
- **Catalogue in PDF format having bookmarks**

Heatlock CAD Library

Our CAD Library is available both on CD-Rom and on Internet. We have made a menu system that makes it very easy to get the drawing You need.
If You work from our CD-Rom, just insert the CD in your computer and You will be guided through the steps to get the drawing You prefer. Our Internet solution is exactly the same, for Your convenience.

Vårt CAD Library finns tillgängligt både på CD-Rom och på Internet. Vi har utvecklat ett enkelt menysystem som gör det mycket enkelt att finna ritningen Du behöver.
Om du jobbar från CD:n, stoppa helt enkelt in den i datorn och du vägleds genom alla steg. På Internet kommer Du att känna igen menysytemet från CD:n, det är precis likadant.

Date: 031002, © LKM Heatlock Co Ltd

Heatlock Toolkit

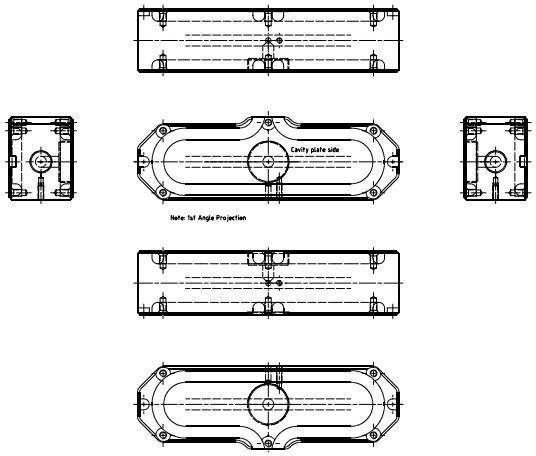

Heatlock 2D CADLibrary

Above is an example of how the drawing of a manifold will be presented when you run your CAD application. All drawings in .dwg format. **All drawings in the CADkit are in 1st angle projection**.

Ovan ses ett exempel på hur våra ritningar visas när du kör ditt CAD program. Alla ritningar är i .dwg format. **Alla våra ritningar återges i "1st angle projection".**

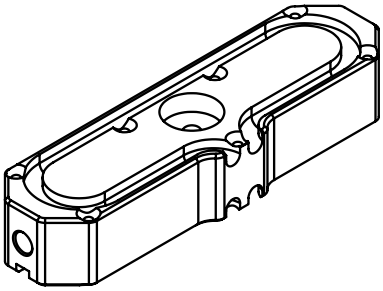

Heatlock 3D CADLibrary

Our 3D CAD Library is delivered in three different versions, depending on Your choise of file format. **Available in IGES, STEP and PARASOLIDS.**

Vårt 3D CAD Library levereras i tre olika versioner, beroende av vilket filformat Du föredrar. **Finns tillgängligt i IGES, STEP och PARASOLIDS.**

Part No.	Description	Content
HEATLOCK-IGS	2D-DWG / 3D-IGES	On CD-ROM
HEATLOCK-STP	2D-DWG / 3D-STEP	On CD-ROM
HEATLOCK-XMT	2D-DWG / 3D-PARASOLIDS	On CD-ROM

This Heatlock series, below, is currently being replaced by the A1-series of nozzles.
Before you design check availability, stock is gradually decreased.
Spare parts will be available until at least end of 2007 (apart form NPT1 bodies)

HEATMANDOC – the full documentation of your system.

With the manifold system, when delivered, follows a project book, which describes the system in full. It includes drawings of the actual system, wiring instructions, spare parts list for the complete system including the nozzles and assembly instructions in printing or in digital format.

Each system is also given an individual project number, this number is of course on the cover of the project book and also engraved on the manifold so it can easily be traced if any details at later stage is required. If you can't track it, do we, at least keep track of it for five years. Just contact us with the number engraved on the manifold.

HEATMANDOC – fullständig dokumentation av Ditt system

Med leveransen av systemet får du en bok som innehåller fullständig specifikation, för installation och framtida spårbarhet. Hela systemet finns beskrivet, ritning med detaljlista, generell installationsritning med inkopplings-schema, reservdelslista för systemet också för dom bussningar som systemet innehåller. Monteringsanvisning allt på papper och i digitalt format.

Varje balk har sitt projekt nummer ingraverat på balkens ovansida, så fort Du lyft bort fästplattan kan Du hitta rätt vilket projekt det är. Har inte Du tillgång till historiken har vi det åt Dig, i minst fem år.

Date: 031002, © LKM Heatlock Co Ltd

Heatman Doc Overview / Oversikt Heatman Doc

List of Heatman Doc

The documentation comprises:

-Part list

-Part drawing

-Project drawing

-Information regarding Bushing (3 pages)

-Spare part list of bushing

-Assembly instruction (2 pages)

-Digital information; drawings in .dwg

-Heatlock catalogue in PDF

Heatman Doc

Dokumentationen omfattar:

-Stycklista

-Styckritning

-Projektritning

-Information om ingående bussning (3 sid.)

-Reservdelslista för bussning

-Monteringsanvisning (2 sidor)

-Digital information; ritningar i .dwg format

-Heatlock katalogen i PDF format

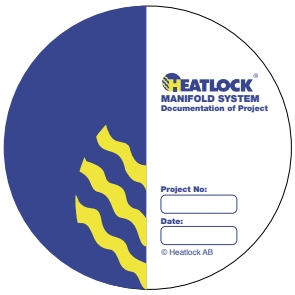

This Heatlock series, below, is currently being replaced by the A1-series of nozzles.
Before you design check availability, stock is gradually decreased.
Spare parts will be available until at least end of 2007 (until form NBT Studies)

Manifold Inserts and Plugs and seals

Plugs or inserts–Your choise!

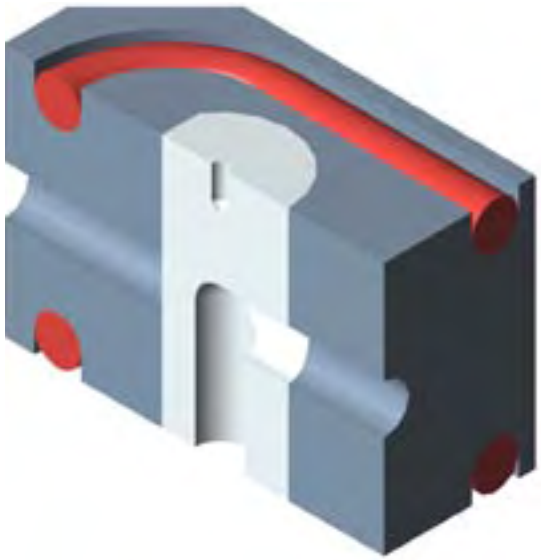

The modular manifold insert enables the manifold design to be more complex compared with conventional plugs and seals. It also ensures flow channels that are smoothly shaped where the flow path changes, and eliminates sharp corners and hang-ups. The inserts are also designed to suit the higher demand on manifold systems for high-pressure moulding, using pressures up to and above 2000 bar.

The manifold inserts are an option on all of Heatlock's standard range, which consists of up to 300 standard designs.

Delivery time for manifolds is 3-4 weeks using this new insert. For conventional plugs the lead time is slightly shorter.

Pluggar eller Inserts–Ditt val!

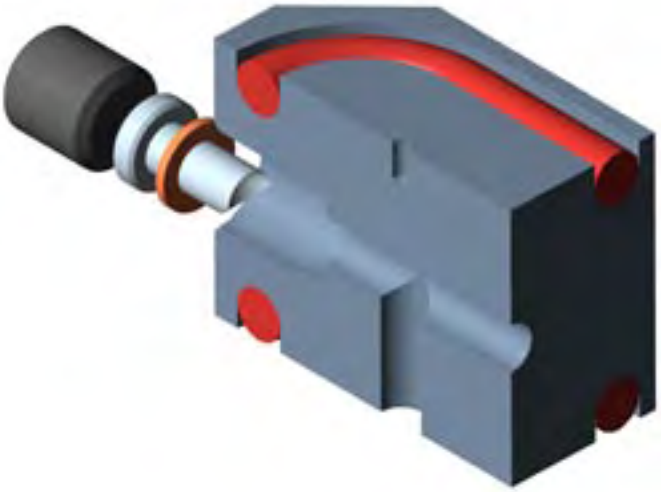

Den modulerbara insatsen tillåter en mera komplex konstruktion av balken jämfört med konventionell pluggning och tätning. Insatsen säkerställer också att flytkanalen löper jämt vid övergångarna. Insatsen är konstruerad att klara formsprutning med höga tryck (2000 bar).

Insatsen finns som tillval för alla Heatlock standardbalkar, vilka omfattar upp till 300 utföranden.

Leveranstiden för balkar med insatser är 3-4 veckor medan de konventionella balkarna med pluggar och tätningar levereras något snabbare.

Date: 031002, © LKM Heatlock Co Ltd

This Heatlock series, below, is currently being replaced by the A1-series of nozzles.
Before you design check availability, stock is gradually decreased.
Spare parts will be available until at least end of 2005 (apart from DPT1 bodies)

Heatlock Manifold design / Heatlock översikt balk

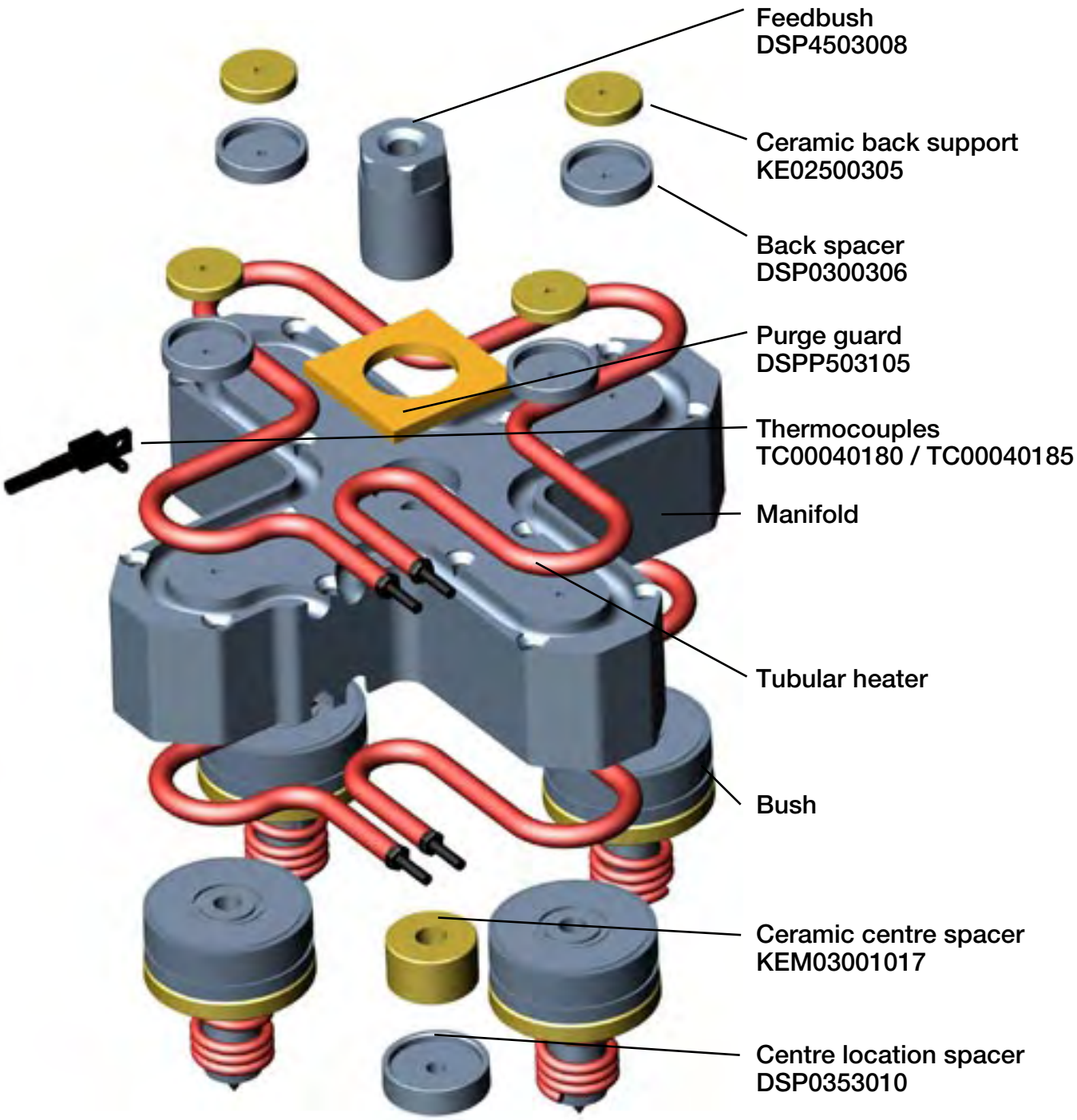

This Heatlock series, below, is currently being replaced by the A1-series of nozzles.
Before you design check availability, stock is gradually decreased.
Spare parts will be available until at least end of 2007 (compatible NPT1 bodies)

Assembly Overview / Monteringsöversikt

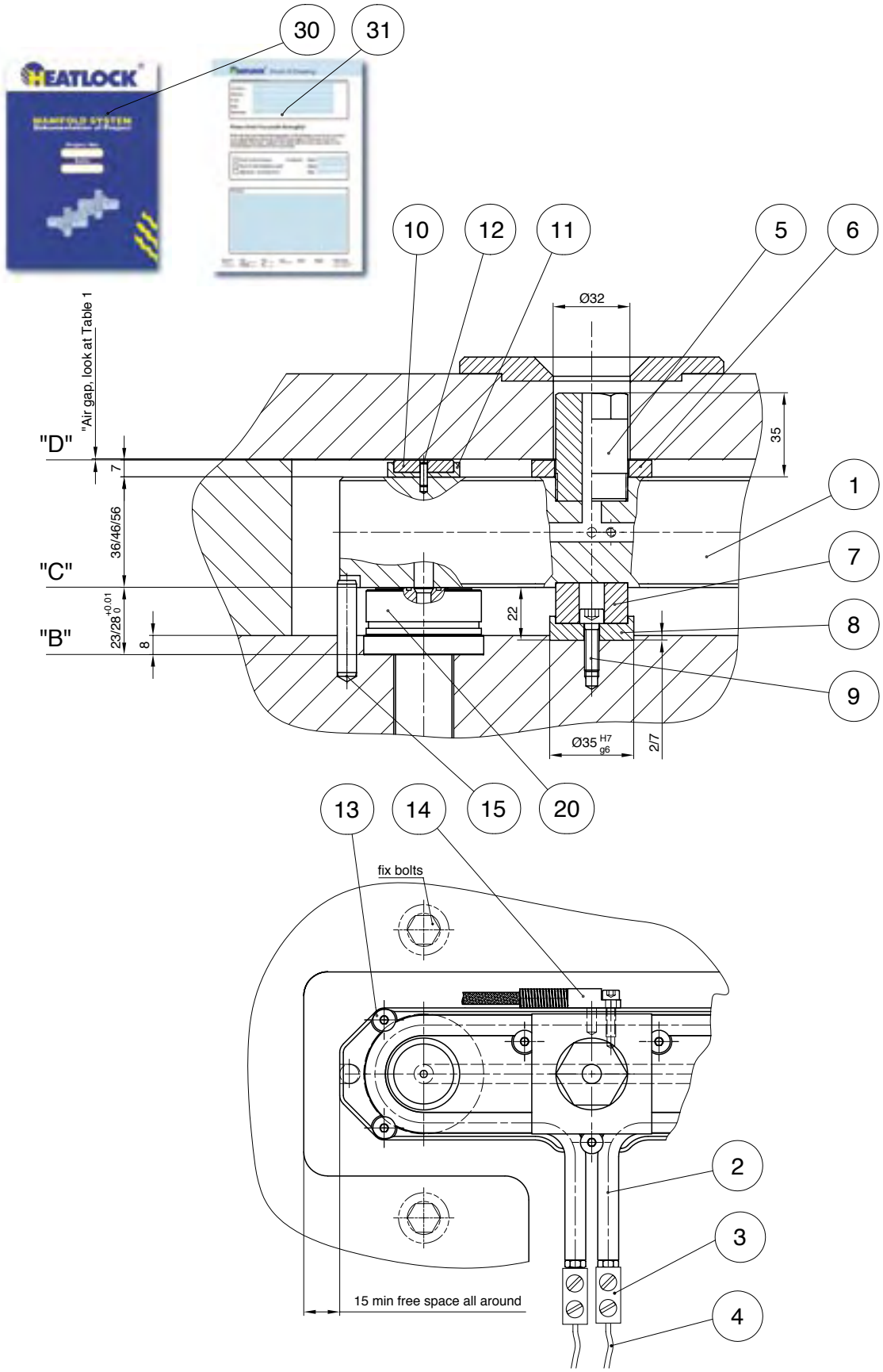

Date: 031002, © LKM Heatlock Co Ltd

Assembly Instruction / Monteringsanvisning

IXHX2

Check the following before the manifold is finally assembled (see overview on the left side):

1. Adjust all the ceramics, insulation for each bushing so that they are all at the same level as Plan ”B”.
2. Put in the bushings and check that the bushings / torpedoes rear plane is at the same height, 0,01 mm, according to the measurement level “C”. Use three measuring points in each bushing.
3. Assemble the ceramic KEM03001017 with the support DSP0353010, measure the total height (approx.24mm). Measure and reduce this height by the pre-bored depth of the ceramic in the manifold, (approx. 2 mm) and the measured distance between plane “C” and plane “B” (approx. 23 or 28 mm depending on the bushing), the remaining 7 or 2 mm is countersunk in the form plate. It is important that the manifold is at the same level as the bushings and don’t have too much play or “roll” under the central support.
4. If the manifold is to be bolted check that the shape of the hole in the manifold matches the hole shape in the cavity plate.
5. Assemble the back support KE02500305 with the support DSP0300306 / DSP0300312, make sure that the ceramic reaches the bottom of the support. Measure and check the height of all the units. If there are any discrepancies, adjust all to the same height within 0.005 mm, work with the underside of the support. Fix this with dowel DW03X12 in the pre-bored holes in the manifold. Correct here for the air gap which there shall be in cold condition to allow for heat expansion according to **table 1.** plane “D”.
6. Put the manifold on the bushings, which is centred using the ceramic center support KEM03001017. Torsion fixing is done with the help of dowels which are placed in the pre-milled slot in the manifold. This is done without the O-rings mounted.
7. Tighten the manifold with the screws provided if the manifold is to be bolted, check that all the cables are free.
8. Check the level of the upper part of the rear support plane “D”, they shall all be within 0.005 mm.
9. Take off the manifold, assemble all the O-rings, re-assemble and check that there are no trapped cables or cables laying against the manifold.
10. Check that the manifold is back at the right level/height from the measurement level “D”. If the manifold isn’t fixed the fixing plate is mounted and tightened so that the O-rings are pressed together before the control is carried out. Heat up to running temperature before the clamp plate is removed for the final check.

Bench testing is important. It proves the electrics and wiring. The more areas that you know are working 100% the better.

Kontrollera följande innan varmkanalsbalken monteras slutgiltigt (se översikten på vänster sida):

1. Justera in all keramik , isolering för varje bussning så att samtliga ligger på samma nivå som Plan ”B”.
2. Sätt dit bussningarna och kontrollera att bussningarna / torpedernas bakre plan ligger inom samma höjd, 0,01 mm, enligt mätvärdesnivå “C”. Använd tre mätpukter på respektive bussning.
3. Sätt ihop keramiken KEM03001017 med stödet DSP0353010, mät upp totalhöjden, (ca.24mm). Mät upp och minska denna höjd med det förborrade djupet för keramiken i varmkanalbalken, (ca. 2 mm) samt det uppmätta måttet mellan plan “C” och plan “B” (ca. 23 eller 28 mm beroende på bussning), återstående ca 7 eller 2 mm försänkes i formplattan. Viktigt är att varmkanalbalken ligger i samma nivå som bussningarna och inte glappar eller “rullar” under centrumstödet.
4. Om varmkanalbalken skall bultas fast kontrollera då att hålbilden i balken överenstämmer med hålbilden i formplattan.
5. Sätt ihop det bakre keramiken KE02500305 med stödet DSP0300306 / DSP0300312, försäkra Dig om att keramiken bottnar i stödet. Mät upp och kontrollera höjden på samtliga enheter. Om eventuell avikelse förekommer , slipa in samtliga till samma höjd, inom 0.005mm, slipa på stödets undersida. Fixera sedan denna enhet med stift DW03X12 i de förborrade hålen i balken. Korrigera även här luftspalten som skall råda i kallt tillstånd som krävs för värmeexpandering i enlighet med **tabell 1.** Plan “D”.
6. Lägg varmkanalbalken på ingötsbussningarna, som centreras i centrumstödet KEM03001017. Vridfixeringen görs med hjälp av en Cylindrisk Pinne som placeras i det förfrästa spåret i balken. Detta görs utan att O-ringarna är monterade.
7. Skruva fast varmkanalbalken med avsedda skruvar om balken skall bultas fast, kontrollera även att samtliga kablar är fria.
8. Kontrollera här nivån på de bakre stödens ovansida -plan “D”, samtliga skall nu ligga inom 0.005 mm.
9. Ta av balken montera samtliga O-ringar, återmontera och kontrollera att det inte finns några ledningar i kläm eller som ligger an mot varmkanalbalken.
10. Kontrollera att varmkanalbalken är tillbaka till rätt nivå / höjd från mätvärdesnivå “D”. Om varmkanalbalken inte är fastskruvad monteras fästplattan och dras fast så att O-ringarna pressas samman innan denna kontroll genomförs. Värm upp systemet till drifttemperatur innan fästplattan tas bort för den sista kontrollen.

Bänkprovet är viktigt. Det visar om de elektriska komponenterna och ledningsdragningen fungerar. Ju fler delar du vet fungerar till 100 %, desto bättre.

Item	Qty	Art. Nr.	Description
31	1	HEATMANPROOF	Proof of drawing in order to start
30	1	HEATMANDOC	Documentation of the Hot-Runner System
20	2	ESB2046102	Sprue Bush, Series 2, L=46 mm
15	1	DW08X40	Dowell Ø8x40
14	1	TC00040180	Thermocouple, L=12
13	14	MF6S08X008	Screw M5x8
12	2	DW03X12	Dowell Ø3x12
11	2	DSP0300306	Back Spacer
10	2	KE02500305	Ceramic Back Support
9	1	CS06020	Screw M6x20
8	1	DSP0353010	Center Location spacer
7	1	KEM03001017	Ceramic Center Spacer
6	1	DSPP503107	Purge Guard
5	1	DSP4503008	Feedbush
4	4	MHWIRE050	Wire
3	4	MHCONN001	Ceramic Connector
2	2	MHI02400	Tubular Heater
1	1	MI2400004608	Standard Manifold, CC=240mm, Feed=Ø8 mm

Table 1 / tabell 1

Heat expansion			
°C	T=36	T=46	T=56
200	0.08	0.10	0.13
250	0.10	0.13	0.16
300	0.12	0.16	0.20
350	0.14	0.18	0.23

This Heatlock series, below, is currently being replaced by the A1-series of nozzles.
Before you design check availability, stock is gradually decreased.
Spare parts will be available until at least end of 2007 (applies to NPT1 bodies)

Manifold assembly

Check list / Checklista

Check the following before the manifold is finally assembled (see overview on 4.1.8):

1. Adjust all the ceramics, insulation for each bushing so that they are all at the same level as Plan "B". ☐
2. Put in the bushings and check that the bushings / torpedoes rear plane is at the same height, 0,01 mm, according to the measurement level "C". Use three measuring points in each bushing. ☐
3. Assemble the ceramic KEM03001017 with the support DSP0353010, measure the total height (approx.24mm). Measure and reduce this height by the pre-bored depth of the ceramic in the manifold, (approx. 2 mm) and the measured distance between plane "C" and plane "B" (approx. 23 or 28 mm depending on the bushing), the remaining 7 or 2 mm is countersunk in the form plate. It is important that the manifold is at the same level as the bushings and don't have too much play or "roll" under the central support. ☐
4. If the manifold is to be bolted check that the shape of the hole in the manifold matches the hole shape in the cavity plate. ☐
5. Assemble the back support KE02500305 with the support DSP0300306 / DSP0300312, make sure that the ceramic reaches the bottom of the support. Measure and check the height of all the units. If there are any discrepancies, adjust all to the same height within 0.005 mm, work with the underside of the support. Fix this with dowel DW03X12 in the pre-bored holes in the manifold. Correct here for the air gap which there shall be in cold condition to allow for heat expansion according to table 1. plane "D". ☐
6. Put the manifold on the bushings, which is centred using the ceramic center support KEM03001017. Torsion fixing is done with the help of dowels which are placed in the pre-milled slot in the manifold. This is done without the O-rings mounted. ☐
7. Tighten the manifold with the screws provided if the manifold is to be bolted, check that all the cables are free. ☐
8. Check the level of the upper part of the rear support plane "D", they shall all be within 0.005 mm. ☐
9. Take off the manifold, assemble all the O-rings, re-assemble and check that there are no trapped cables or cables laying against the manifold. ☐
10. Check that the manifold is back at the right level/height from the measurement level "D". If the manifold isn't fixed the fixing plate is mounted and tightened so that the O-rings are pressed together before the control is carried out. Heat up to running temperature before the clamp plate is removed for the final check. ☐

Bench testing is important. It proves the electrics and wiring. The more areas that you know are working 100% the better.

according to item 5 above, specify the Airgap:.....

Kontrollera följande innan varmkanalsbalken monteras slutgiltigt (se översikten på 4.1.8):

1. Justera in all keramik , isolering för varje bussning så att samtliga ligger på samma nivå som Plan "B". ☐
2. Sätt dit bussningarna och kontrollera att bussningarna / torpedernas bakre plan ligger inom samma höjd, 0,01 mm, enligt mätvärdesnivå "C". Använd tre mätpukter på respektive bussning. ☐
3. Sätt ihop keramiken KEM03001017 med stödet DSP0353010, mät upp totalhöjden, (ca.24mm). Mät upp och minska denna höjd med det förborrade djupet för keramiken i varmkanalbalken, (ca. 2 mm) samt det uppmätta måttet mellan plan "C" och plan "B" (ca. 23 eller 28 mm beroende på bussning), återstående ca 7 eller 2 mm försänkes i formplattan. Viktigt är att varmkanalbalken ligger i samma nivå som bussningarna och inte glappar eller "rullar" under centrumstödet. ☐
4. Om varmkanalbalken skall bultas fast kontrollera då att hålbilden i balken överenstämmer med hålbilden i formplattan. ☐
5. Sätt ihop det bakre keramiken KE02500305 med stödet DSP0300306 / DSP0300312, försäkra Dig om att keramiken bottnar i stödet. Mät upp och kontrollera höjden på samtliga enheter. Om eventuell avikelse förekommer , slipa in samtliga till samma höjd, inom 0.005mm, slipa på stödets undersida. Fixera sedan denna enhet med stift DW03X12 i de förborrade hålen i balken. Korrigera även här luftspalten som skall råda i kallt tillstånd som krävs för värmeexpandering i enlighet med tabell 1. Plan "D". ☐
6. Lägg varmkanalbalken på ingötsbussningarna, som centreras i centrumstödet KEM03001017. Vridfixeringen görs med hjälp av en Cylindrisk Pinne som placeras i det förfrästa spåret i balken. Detta görs utan att O-ringarna är monterade. ☐
7. Skruva fast varmkanalbalken med avsedda skruvar om balken skall bultas fast, kontrollera även att samtliga kablar är fria. ☐
8. Kontrollera här nivån på de bakre stödens ovansida -plan "D", samtliga skall nu ligga inom 0.005 mm. ☐
9. Ta av balken montera samtliga O-ringar, återmontera och kontrollera att det inte finns några ledningar i kläm eller som ligger an mot varmkanalbalken. ☐
10. Kontrollera att varmkanalbalken är tillbaka till rätt nivå / höjd från mätvärdesnivå "D". Om varmkanalbalken inte är fastskruvad monteras fästplattan och dras fast så att O-ringarna pressas samman innan denna kontroll genomförs. Värm upp systemet till drifttemperatur innan fästplattan tas bort för den sista kontrollen. ☐

Bänkprovet är viktigt. Det visar om de elektriska komponenterna och ledningsdragningen fungerar. Ju fler delar du vet fungerar till 100 %, desto bättre.

Enligt punkt 5 ovan, ange luftspalten:.....

Controlled by / kontrollerad av:

Company / Företag:	
Name / Namn:	
Address / Adress:	
Date / Datum:	
Project No. / Projektnr.	

At eventual complaint, this form shall be filled in and signed. Attach this form to the complaint.

Vid eventuell reklamation skall denna sida vara ifylld och signerad samt bifogad till oss.

Date: 031002, © LKM Heatlock Co Ltd

This Heatlock series, below, is currently being replaced by the A1-series of nozzles.
Before you design check availability, stock is gradually decreased.
Spare parts will be available until at least end of 2007 (apart form NPT1 bodies)

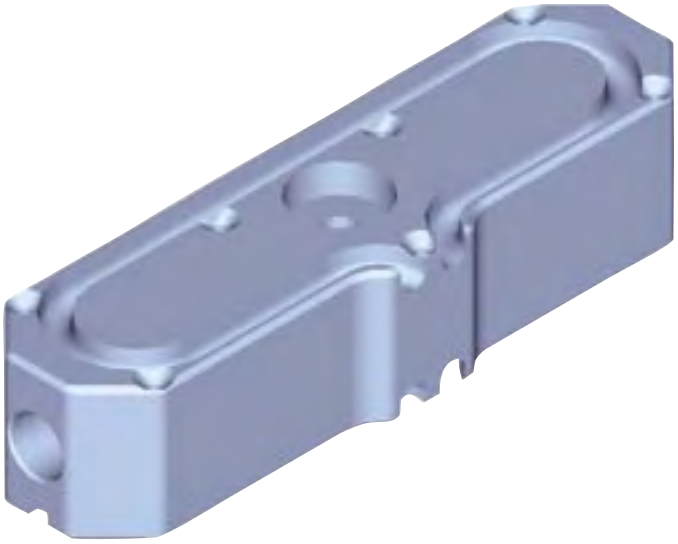

Heatlock Standard Manifold / Heatlock standardbalk

Our range of **Standard Manifolds in I-types** are very comprehensive. They are available in a wide range of lenghts and feed sizes to suite your needs.

Sizes of the cc-dimensions from 80 to 280 mm and feed diameters of 6, 8, 10, 12, 14 and 16 mm are at your choise. The height of the manifolds are 36, 46 or 56 mm, with tolerances within 0,02 mm.

Our manifolds are made of **1.2311/P20/N20**, which is suitable for every common plastic. In regards of further technical qualities we refer to our **QF**-quality standard including our **MI_STD**.

The manifolds are of type ”floated”, centered at the middle with our yellow ceramic, insulated with back supports, also made of ceramic, against the clamping plate. All this is made to keep the heat where it belongs. The ceramic has only 7% of ther conductivity of steel, suitable to insulate between cold and hot components.

For complete location of the manifold, only one additional cylindrical pin is required, which minimize the heat loss. To achieve a even heat within the manifold we use tubular heaters, one at each side.

All Heatlock Standard Manifolds are delivered to you within 3 weeks. If you need manifolds not included in our standard range we have the possibility to make custom made manifolds, also within 3 weeks.

Vår serie **standardbalkar** i **I** -utförande är mycket bred. De finns i en mängd olika längder och med olika flytkanalsstorlekar för att passa Ditt behov.

Storlekarna varierar med ett centrumavstånd mellan bussningarna på 80 till 280mm,där Du väljer en flytkanalsstorlek som passar, finns i steg om 6, 8, 10, 12, 14 och 16 mm. Höjden på balkarna för dessa flytkanalsstorlekar ligger på 36, 46 och 56 mm, och håller en tolerans inom 0,02mm.

Balkarna är gjorda i material **1.2311/P20/N20** som väl täcker kravet för att passa de flesta plaster, för övrigt vad gäller den tekniska kvalitén hänvisar vi till vårt **QF** där vår **MI_STD** ingår.

Balkarna är av typen ” flytande ”, centrerade i mitten med vår Gula Keramik, isolerade med Bakre stöd mot fästplattan, även dessa naturligtvis gjorda utav Keramik enkom för att behålla värmen där den hör hemma. Keramiken har endast 7 % av stålets värmeledningsförmåga varför det med fördel används för att isolera kalla och varma detaljer från varandra.

Balkarna vridfixeras med hjälp utav en cylindrisk pinne, allt för att minimera värmeöverföring. För att erhålla en jämn värme över hela balken använder vi oss utav runda ipressade element, ett på var sida.

Balkarna levereras komplett färdiga inom 3 veckor, och skulle någon av dessa balkar inte passa just ditt projekt, tar vi fram en specialbalk för ditt ändamål även denna inom 3 veckor.

This Heatlock series, below, is currently being replaced by the A1-series of nozzles.
Before you design check availability, stock is gradually decreased.
Spare parts will be available until Stock end of 2007 (Valid for 3F, MP1 bodies)

Heatlock Standard Manifold

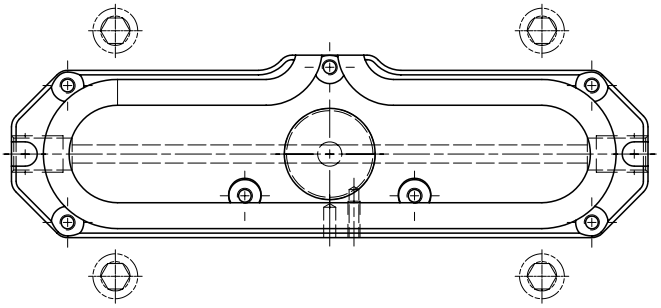

Recommendation
To avoid any leakage, we recommend you to increase the number of bolts, according to the drawing to the left. The bolts should be placed over the centre of every nozzle.

Rekommendation
För att förhindra eventuella läckage kan man med fördel placera extra bultar enligt riningen till vänster. Dessa bör placeras mitt för bussningarnas respektive centrum.

Tightening torque Nm, distribution of applied torque + - 5%. Quality 12.9	
Size	**Torque Nm**
M8	40
M10	79
M12	136
M16	333
M20	649

Explanation of measure abbreviations	
Abb	**Explanation**
c/c X	Distance between drops in x-ledge
c/c Y	Distance between drops in y-ledge
T	Thickness of manifold
Feed	Feed channel
L	Lenght
V	Total Volume of feed channels
W	Wattage
CL	Centre line

Date: 031002, © LKM Heatlock Co Ltd

This Heatlock series, below, is currently being replaced by the A1-series of nozzles.
Before you design check availability, stock is gradually decreased.
Spare parts will be available until at least end of 2007 (apart form NPT threaded)

Feed 6 Heatlock Standard Manifold

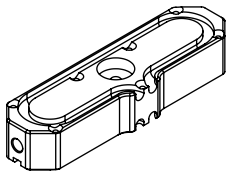

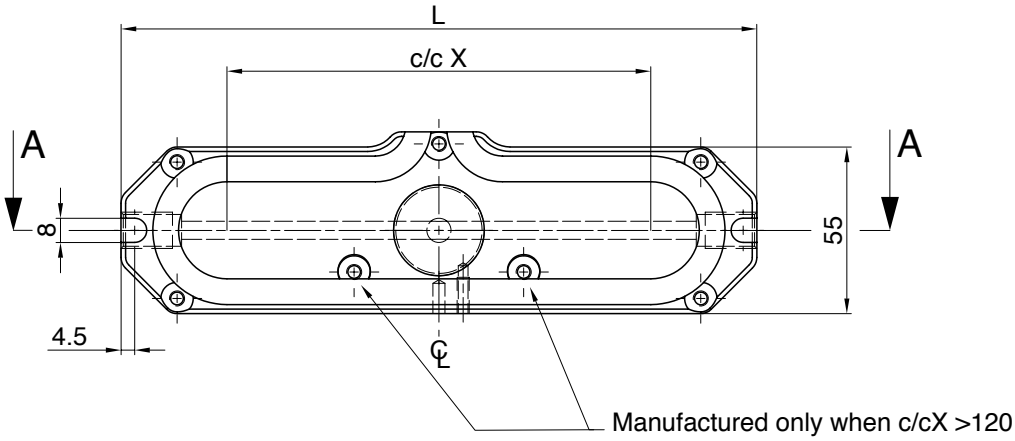

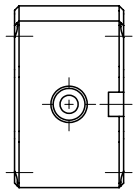

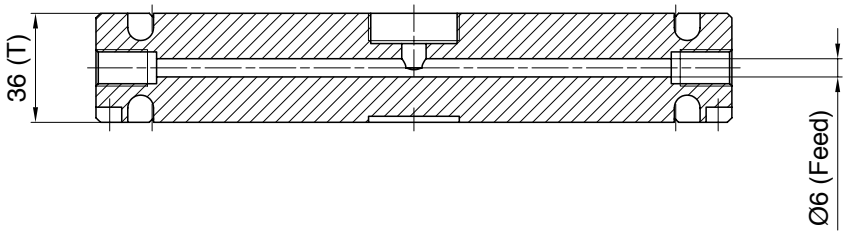

Technical Data / Teknisk data

Our manifolds are made in material 1.2311/P20/N20. The manifolds are all finished to your *exact* specifications using our pre-configured Heatlock standard. Latest news always available at **www.heatlock.com**

Våra balkar är tillverkade i material 1.2311/P20/N20. Balkarna tillverkas efter dina *exakta* önskemål och följer vår Heatlock standard. För ytterligare information, vänligen kontakta oss. Senaste information finner du alltid på **www.heatlock.com**

Part No.	c/c X	T	Feed		L	V (mm³)
MI00600003606	60	36	6		130	1837
MI00800003606	80	36	6		150	3250
MI01000003606	100	36	6		170	2967
MI01200003606	120	36	6		190	3533
MI01400003606	140	36	6		210	4098
MI01600003606	160	36	6		230	4663
MI02000003606	200	36	6		270	5793
MI02400003606	240	36	6		310	6924
MI02800003606	280	36	6		350	8054

Note: cc X and cc Y is max. distances between every drop. Specify your dim's and moulded material, below. We will adjust manifold dim's accordingly. Default moulding temp. 200°C if nothing else noted.

Obs: cc X och cc Y anger max. avstånd mellan varje drop. Ange önskade mått och material som skall sprutas. Vi justerar balkens mått enligt dess temp. Om ingen temp. anges använder vi 200°C som standard.

Customer Notes / Noteringar av kund

Manifold Part No. _____ temp. °C / Mat. / ☐ Inserts ☐ Plugs

A - A

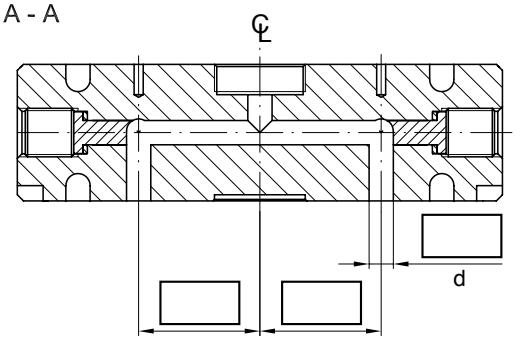

When ordering, fill in dimensions and fax your local distributor.
Vid beställning, fyll i mått och faxa in din beställning till oss.

Company	
Name	
Address	
Phone	
Fax	
E-mail	

This Heatlock series, below, is currently being replaced by the A1-series of nozzles.
Before you design check availability, stock is gradually decreased.
Spare parts will be available until the end of 2009 and beyond UPON REQUEST.

Feed 8 Heatlock Standard Manifold

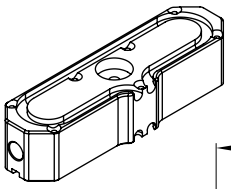

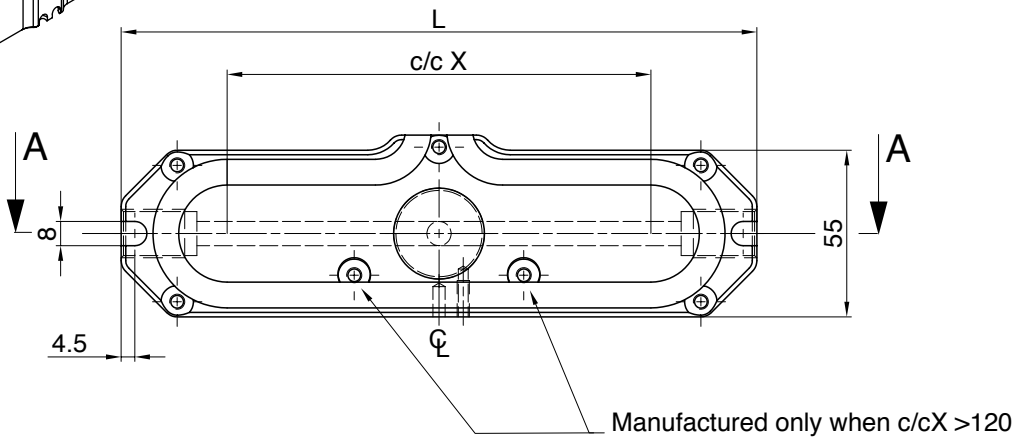

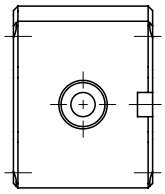

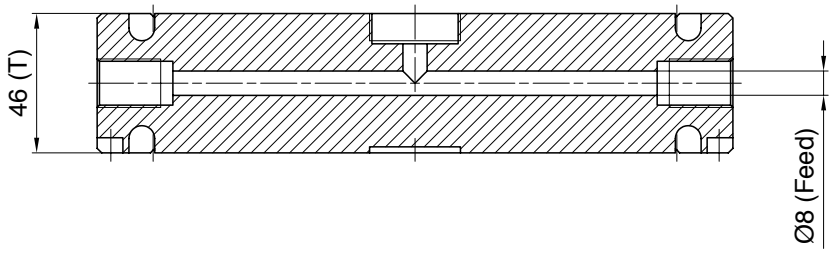

Technical Data / Teknisk data

Our manifolds are made in material 1.2311/P20/N20. The manifolds are all finished to your *exact* specifications using our pre-configured Heatlock standard. Latest news always available at **www.heatlock.com**

Våra balkar är tillverkade i material 1.2311/P20/N20. Balkarna tillverkas efter dina *exakta* önskemål och följer vår Heatlock standard. För ytterligare information, vänligen kontakta oss. Senaste information finner du alltid på **www.heatlock.com**

Part No.	c/c X	T	Feed		L	V (mm³)
MI00600004608	60	46	8		130	4421
MI00800004608	80	46	8		150	6381
MI01000004608	100	46	8		170	7385
MI01200004608	120	46	8		190	8390
MI01400004608	140	46	8		210	9395
MI01600004608	160	46	8		230	10399
MI02000004608	200	46	8		270	12409
MI02400004608	240	46	8		310	14419
MI02800004608	280	46	8		350	16428

Note: cc X and cc Y is max. distances between every drop. Specify your dim's and moulded material, below. We will adjust manifold dim's accordingly. Default moulding temp. 200°C if nothing else noted.

Obs: cc X och cc Y anger max. avstånd mellan varje drop. Ange önskade mått och material som skall sprutas. Vi justerar balkens mått enligt dess temp. Om ingen temp. anges använder vi 200°C som standard.

Customer Notes / Noteringar av kund

Manifold Part No. _____ temp. °C / Mat. / ☐ Inserts ☐ Plugs

A - A

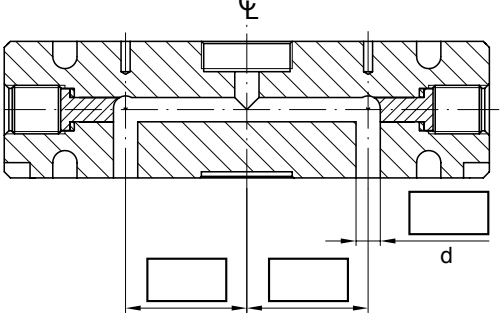

When ordering, fill in dimensions and fax your local distributor.
Vid beställning, fyll i mått och faxa in din beställning till oss.

Company	
Name	
Address	
Phone	
Fax	
E-mail	

Date: 031002, © LKM Heatlock Co Ltd

This Heatlock series, below, is currently being replaced by the A1-series of nozzles.
Before you design check availability, stock is gradually decreased.
Spare parts will be available until at least end of 2007 (apart form NBT1 bodies)

Feed 10 Heatlock Standard Manifold

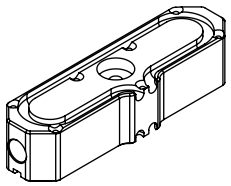

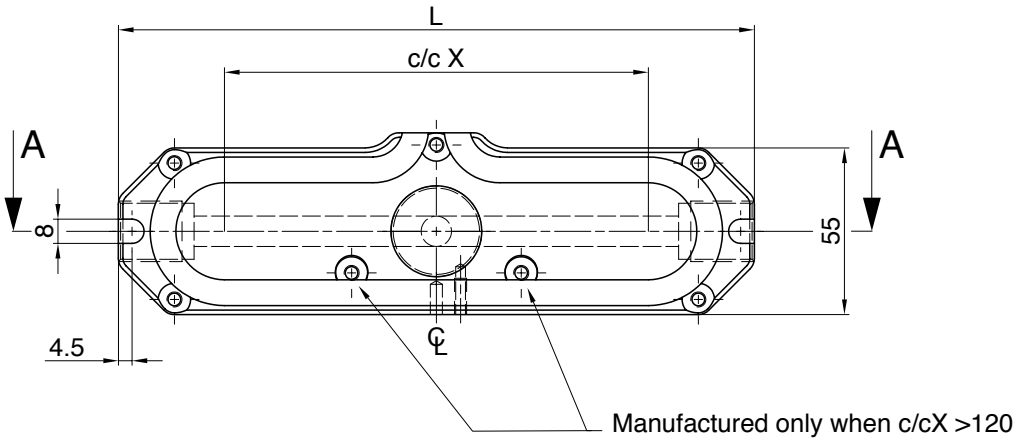

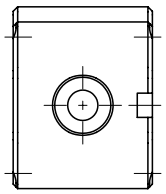

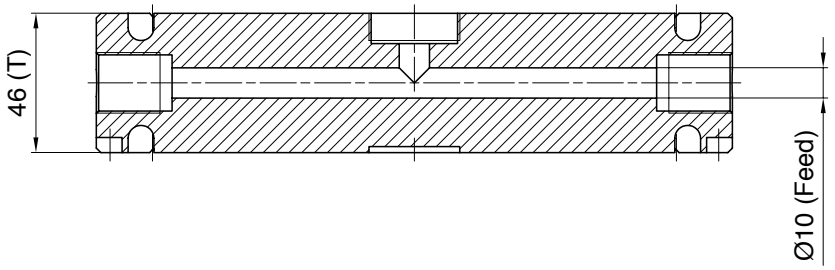

Technical Data / Teknisk data

Our manifolds are made in material 1.2311/P20/N20. The manifolds are all finished to your *exact* specifications using our pre-configured Heatlock standard. Latest news always available at **www.heatlock.com**

Våra balkar är tillverkade i material 1.2311/P20/N20. Balkarna tillverkas efter dina *exakta* önskemål och följer vår Heatlock standard. För ytterligare information, vänligen kontakta oss. Senaste information finner du alltid på **www.heatlock.com**

Part No.	c/c X	T	Feed		L	V (mm³)
MI00600004610	60	46	10		130	8164
MI00800004610	80	46	10		150	9734
MI01000004610	100	46	10		170	11304
MI01200004610	120	46	10		190	12874
MI01400004610	140	46	10		210	14444
MI01600004610	160	46	10		230	16014
MI02000004610	200	46	10		270	19154
MI02400004610	240	46	10		310	22294
MI02800004610	280	46	10		350	25434

Note: cc X and cc Y is max. distances between every drop. Specify your dim's and moulded material, below. We will adjust manifold dim's accordingly. Default moulding temp. 200°C if nothing else noted.

Obs: cc X och cc Y anger max. avstånd mellan varje drop. Ange önskade mått och material som skall sprutas. Vi justerar balkens mått enligt dess temp. Om ingen temp. anges använder vi 200°C som standard.

Customer Notes / Noteringar av kund

Manifold Part No. _____ temp. °C / Mat. / ☐ Inserts ☐ Plugs

A - A

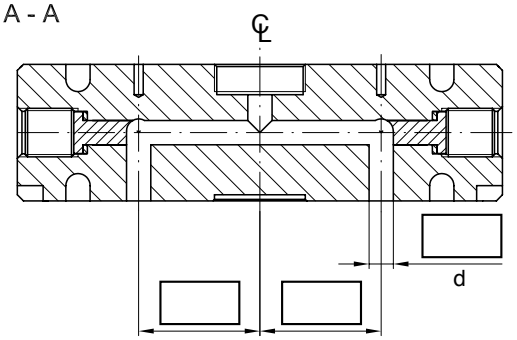

When ordering, fill in dimensions and fax your local distributor.
Vid beställning, fyll i mått och faxa in din beställning till oss.

Company	
Name	
Address	
Phone	
Fax	
E-mail	

This Heatlock series, below, is currently being replaced by the A1-series of nozzles.
Before you design check availability, stock is gradually decreased.
Spare parts will be available for a few years. [illegible] NOT [illegible]

Feed 12 Heatlock Standard Manifold

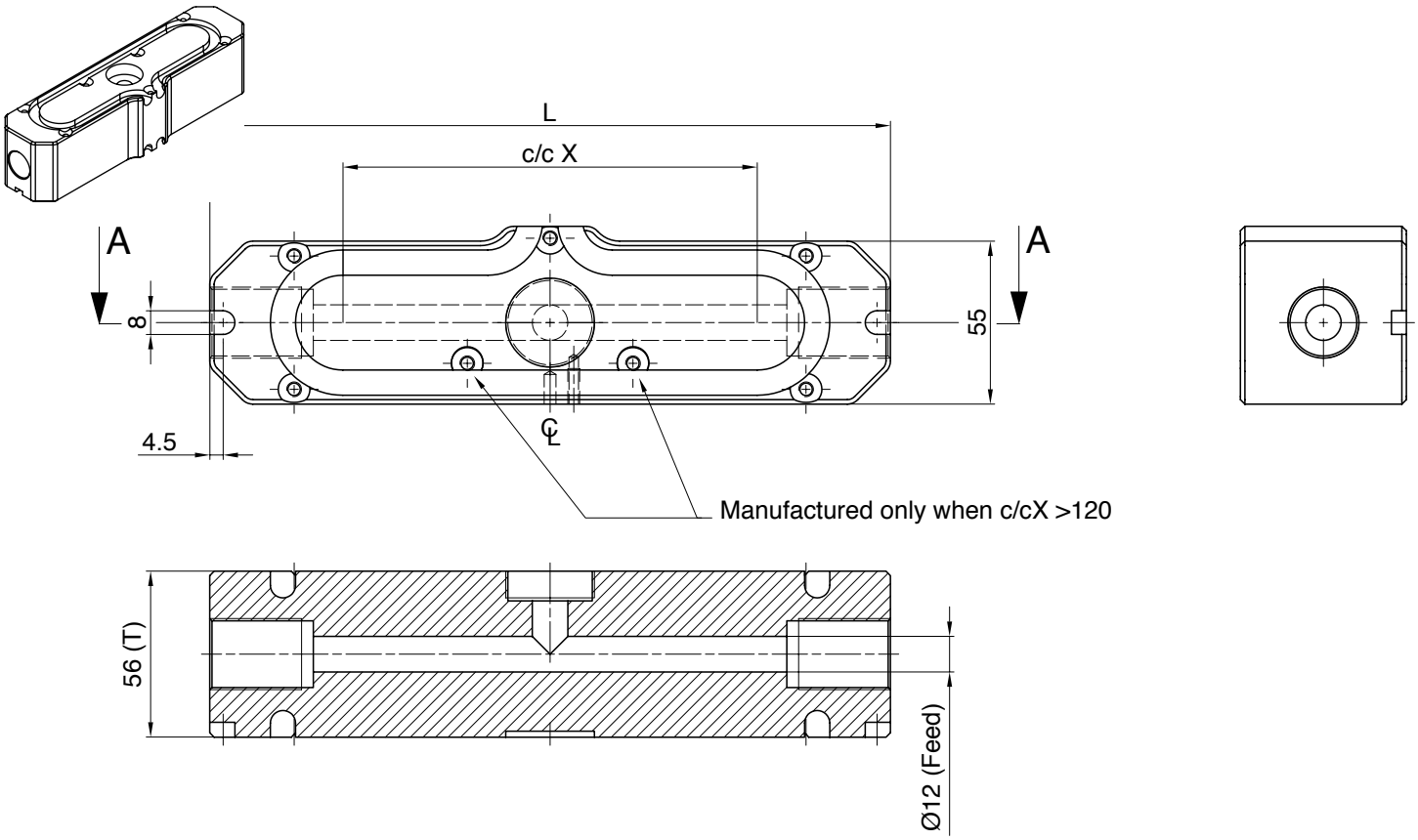

Technical Data / Teknisk data

Our manifolds are made in material 1.2311/P20/N20. The manifolds are all finished to your *exact* specifications using our pre-configured Heatlock standard. Latest news always available at **www.heatlock.com**

Våra balkar är tillverkade i material 1.2311/P20/N20. Balkarna tillverkas efter dina *exakta* önskemål och följer vår Heatlock standard. För ytterligare information, vänligen kontakta oss. Senaste information finner du alltid på **www.heatlock.com**

Part No.	c/c X	T	Feed		L	V (mm³)
MI00800005612	80	56	12		170	15373
MI01000005612	100	56	12		190	17634
MI01200005612	120	56	12		210	19895
MI01400005612	140	56	12		230	22155
MI01600005612	160	56	12		250	24417
MI02000005612	200	56	12		290	28938
MI02400005612	240	56	12		330	33460
MI02800005612	280	56	12		370	37981

Note: cc X and cc Y is max. distances between every drop. Specify your dim's and moulded material, below. We will adjust manifold dim's accordingly. Default moulding temp. 200°C if nothing else noted.

Obs: cc X och cc Y anger max. avstånd mellan varje drop. Ange önskade mått och material som skall sprutas. Vi justerar balkens mått enligt dess temp. Om ingen temp. anges använder vi 200°C som standard.

Customer Notes / Noteringar av kund

Manifold Part No. _____ temp. °C / Mat. / ☐ Inserts ☐ Plugs

A - A

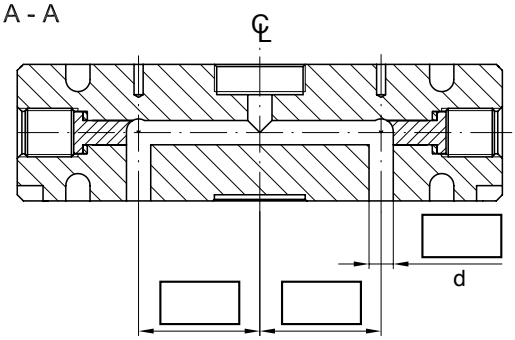

When ordering, fill in dimensions and fax your local distributor.
Vid beställning, fyll i mått och faxa in din beställning till oss.

Company	
Name	
Address	
Phone	
Fax	
E-mail	

Date: 031002, © LKM Heatlock Co Ltd

This Heatlock series, below, is currently being replaced by the A1-series of nozzles.
Before you design check availability, stock is gradually decreased.
Spare parts will be available until at least end of 2007 (apart form NBT1 bodies)

Feed 14 Heatlock Standard Manifold

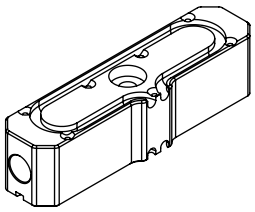

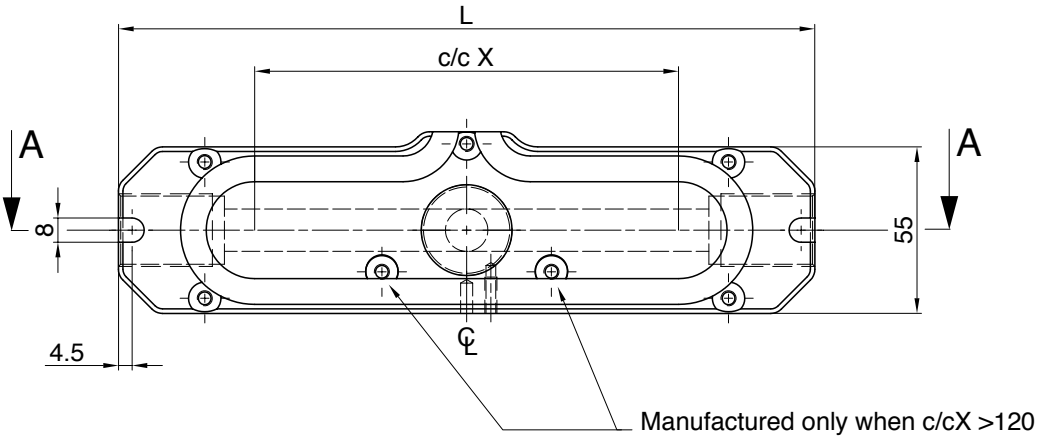

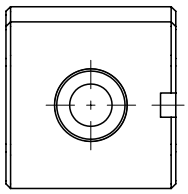

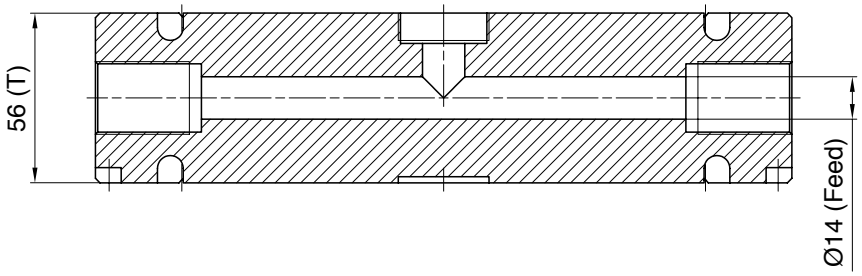

Technical Data / Teknisk data

Our manifolds are made in material 1.2311/P20/N20. The manifolds are all finished to your *exact* specifications using our pre-configured Heatlock standard. Latest news always available at **www.heatlock.com**

Våra balkar är tillverkade i material 1.2311/P20/N20. Balkarna tillverkas efter dina *exakta* önskemål och följer vår Heatlock standard. För ytterligare information, vänligen kontakta oss. Senaste information finner du alltid på **www.heatlock.com**

Part No.	c/c X	T	Feed		L	V (mm³)
MI00800005614	80	56	14		170	20463
MI01000005614	100	56	14		190	23541
MI01200005614	120	56	14		210	26618
MI01400005614	140	56	14		230	29695
MI01600005614	160	56	14		250	32772
MI02000005614	200	56	14		290	38927
MI02400005614	240	56	14		330	45081
MI02800005614	280	56	14		370	51235

Note: cc X and cc Y is max. distances between every drop. Specify your dim's and moulded material, below. We will adjust manifold dim's accordingly. Default moulding temp. 200°C if nothing else noted.

Obs: cc X och cc Y anger max. avstånd mellan varje drop. Ange önskade mått och material som skall sprutas. Vi justerar balkens mått enligt dess temp. Om ingen temp. anges använder vi 200°C som standard.

Customer Notes / Noteringar av kund

Manifold Part No. _____ temp. °C / Mat. / ☐ Inserts ☐ Plugs

A - A

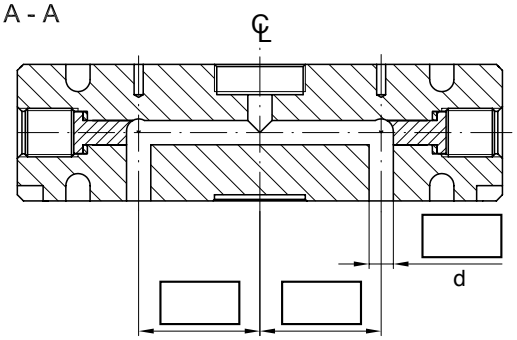

When ordering, fill in dimensions and fax your local distributor.
Vid beställning, fyll i mått och faxa in din beställning till oss.

Company	
Name	
Address	
Phone	
Fax	
E-mail	

This Heatlock series, below, is currently being replaced by the A1-series of nozzles.
Before you design check availability, stock is gradually decreased.
Spare parts will be available for a few years. [illegible] NOT [illegible]

Feed 16 Heatlock Standard Manifold

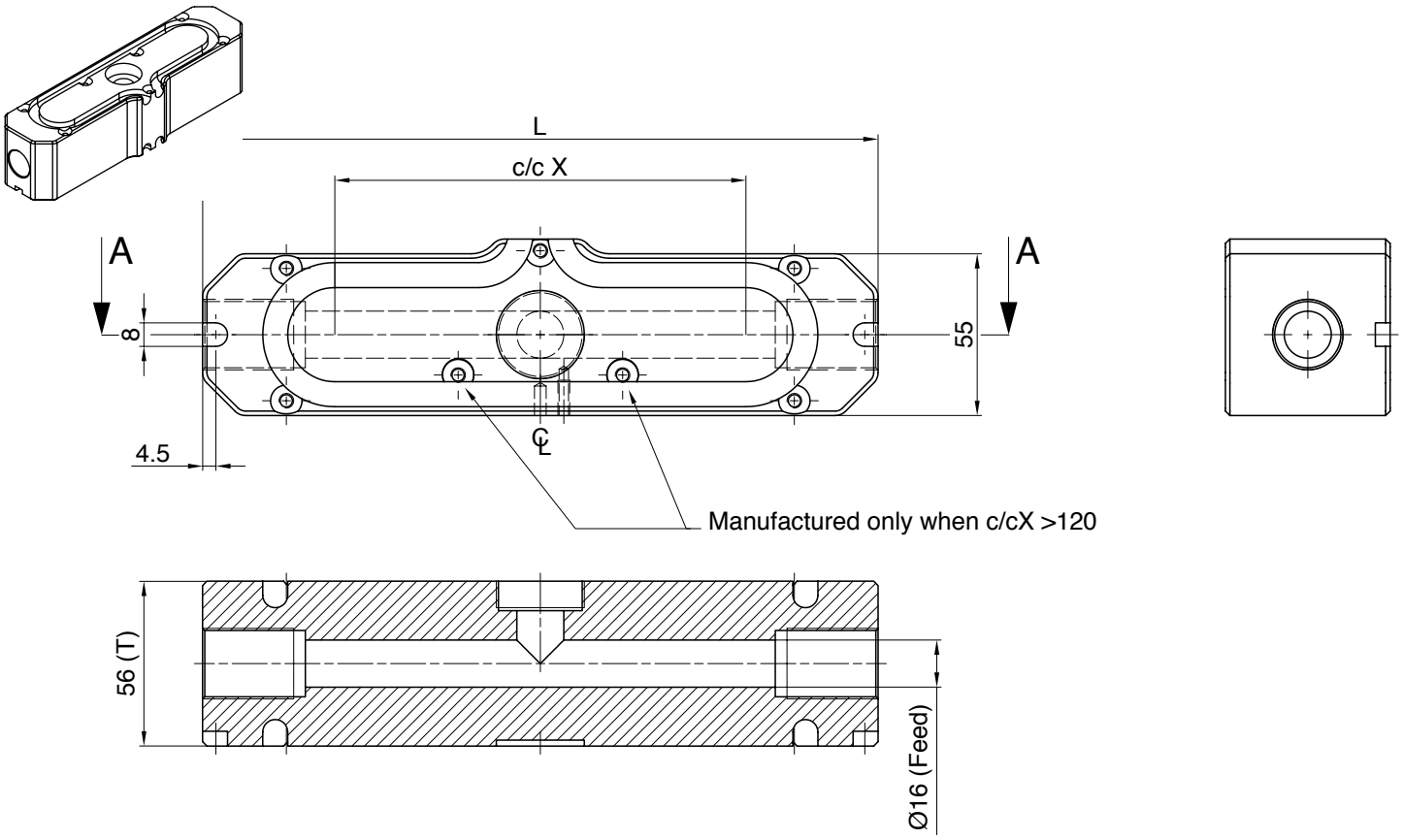

Technical Data / Teknisk data

Our manifolds are made in material 1.2311/P20/N20. The manifolds are all finished to your *exact* specifications using our pre-configured Heatlock standard. Latest news always available at **www.heatlock.com**

Våra balkar är tillverkade i material 1.2311/P20/N20. Balkarna tillverkas efter dina *exakta* önskemål och följer vår Heatlock standard. För ytterligare information, vänligen kontakta oss. Senaste information finner du alltid på **www.heatlock.com**

Part No.	c/c X	T	Feed		L	V (mm³)
MI00800005616	80	56	16		170	26125
MI01000005616	100	56	16		190	30144
MI01200005616	120	56	16		210	34163
MI01400005616	140	56	16		230	38182
MI01600005616	160	56	16		250	42201
MI02000005616	200	56	16		290	50240
MI02400005616	240	56	16		330	58278
MI02800005616	280	56	16		370	66317

Note: cc X and cc Y is max. distances between every drop. Specify your dim's and moulded material, below. We will adjust manifold dim's accordingly. Default moulding temp. 200°C if nothing else noted.

Obs: cc X och cc Y anger max. avstånd mellan varje drop. Ange önskade mått och material som skall sprutas. Vi justerar balkens mått enligt dess temp. Om ingen temp. anges använder vi 200°C som standard.

Customer Notes / Noteringar av kund

Manifold Part No. _____ temp. °C / Mat. / ☐ Inserts ☐ Plugs

A - A

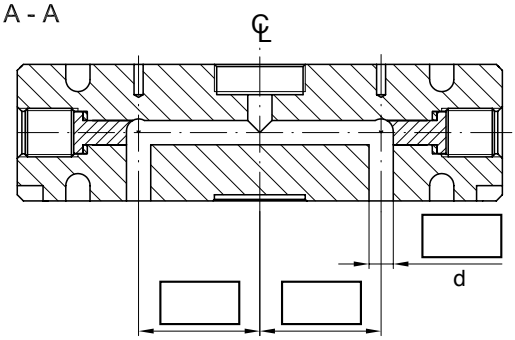

When ordering, fill in dimensions and fax your local distributor.
Vid beställning, fyll i mått och faxa in din beställning till oss.

Company	
Name	
Address	
Phone	
Fax	
E-mail	

Date: 031002, © LKM Heatlock Co Ltd

This Heatlock series, below, is currently being replaced by the A1-series of nozzles.
Before you design check availability, stock is gradually decreased.
Spare parts will be available until at least end of 2007 (apart form NPT1 bodies)

Heatlock Standard Manifold

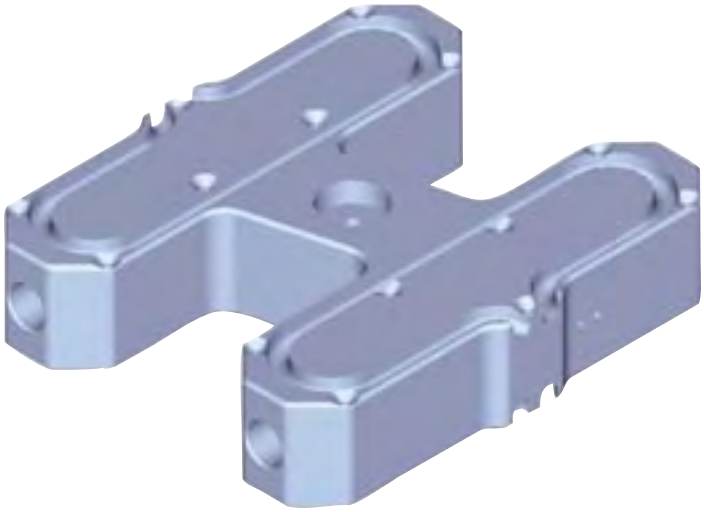

Heatlock Standard Manifold / Heatlock standardbalk

Our range of **Standard Manifolds in H-types** are very comprehensive. They are available in a wide range of lenghts and feed sizes to suite your needs.

Sizes of the cc-dimensions from 80 to 280 mm and feed diameters of 6, 8, 10, 12, 14 and 16 mm are at your choise. The height of the manifolds are 36, 46 or 56 mm, with tolerances within 0,02 mm.

Our manifolds are made of **1.2311/P20/N20**, which is suitable for every common plastic. In regards of further technical qualities we refer to our **QF**-quality standard including our **MI_STD**.

The manifolds are of type ”floated”, centered at the middle with our yellow ceramic, insulated with back supports, also made of ceramic, against the clamping plate. All this is made to keep the heat where it belongs. The ceramic has only 7% of ther conductivity of steel, suitable to insulate between cold and hot components.

For complete location of the manifold, only one additional cylindrical pin is required, which minimize the heat loss. To achieve a even heat within the manifold we use tubular heaters at each side.

All Heatlock Standard Manifolds are delivered to you within 3 weeks. If you need manifolds not included in our standard range we have the possibility to make custom made manifolds, also within 3 weeks.

Vår serie **standardbalkar** i **H** -utförande är mycket bred. De finns i en mängd olika längder och med olika flytkanalsstorlekar för att passa Ditt behov.

Storlekarna varierar med ett centrumavstånd mellan bussningarna på 80 till 280mm,där Du väljer en flytkanalsstorlek som passar, finns i steg om 6, 8, 10, 12, 14 och 16 mm. Höjden på balkarna för dessa flytkanalsstorlekar ligger på 36, 46 och 56 mm, och håller en tolerans inom 0,02mm.

Balkarna är gjorda i material **1.2311/P20/N20** som väl täcker kravet för att passa de flesta plaster, för övrigt vad gäller den tekniska kvalitén hänvisar vi till vårt **QF** där vår **MI_STD** ingår.

Balkarna är av typen ” flytande ”, centrerade i mitten med vår Gula Keramik, isolerade med Bakre stöd mot fästplattan, även dessa naturligtvis gjorda utav Keramik enkom för att behålla värmen där den hör hemma. Keramiken har endast 7 % av stålets värmeledningsförmåga varför det med fördel används för att isolera kalla och varma detaljer från varandra.

Balkarna vridfixeras med hjälp utav en cylindrisk pinne, allt för att minimera värmeöverföring. För att erhålla en jämn värme över hela balken använder vi oss utav runda ipressade element på varje sida.

Balkarna levereras komplett färdiga inom 3 veckor, och skulle någon av dessa balkar inte passa just ditt projekt, tar vi fram en specialbalk för ditt ändamål även denna inom 3 veckor.

This Heatlock series, below, is currently being replaced by the A1-series of nozzles.
Before you design check availability, stock is gradually decreased.
Spare parts will be available until the end of 2007. Contact Heatlock A1 bodies)

Heatlock Standard Manifold

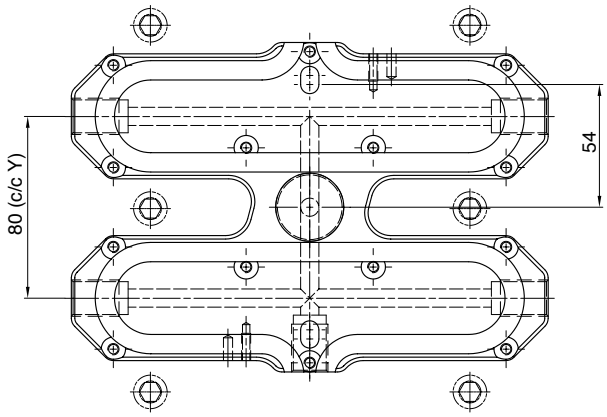

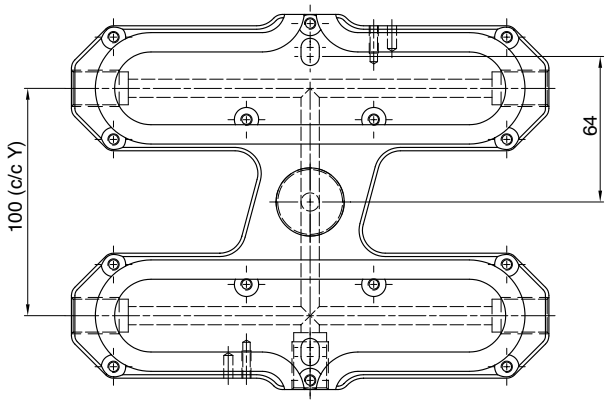

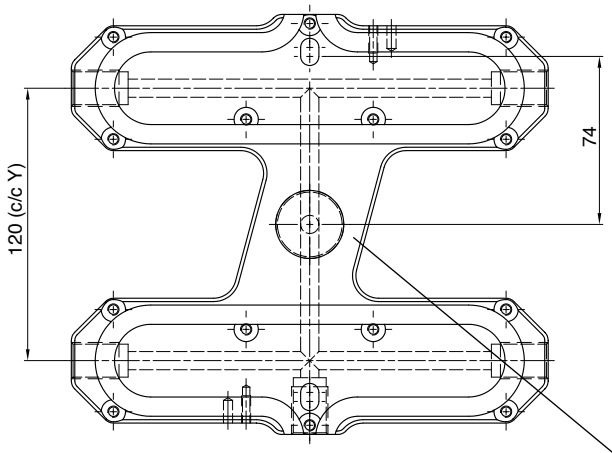

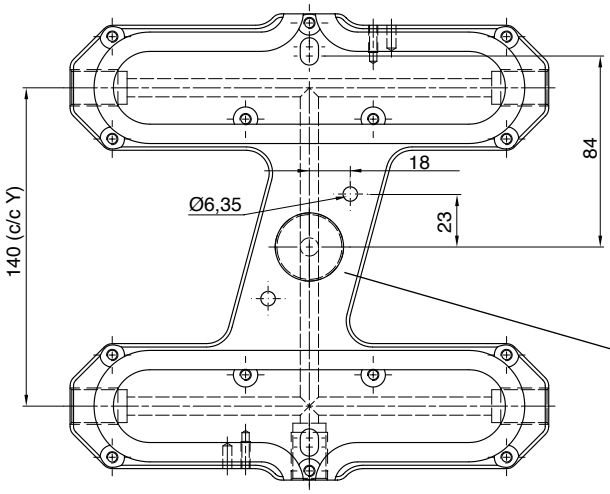

Recommendation
To avoid any leakage, we recommend you to increase the number of bolts, according to the drawing to the left. The bolts should be placed over the centre of every nozzle, as close as possible to the manifold (leave a space of 15 mm).

Rekommendation
För att förhindra eventuella läckage kan man med fördel placera extra bultar enligt riningen till vänster. Dessa bör placeras mitt för bussningarnas respektive centrum, så nära balken som möjligt (lämna 15 mm runt om).

Tightening torque Nm, distribution of applied torque + - 5%. Quality 12.9	
Size	**Torque Nm**
M8	40
M10	79
M12	136
M16	333
M20	649

Explanation of measure abbreviations	
Abb	**Explanation**
c/c X	Distance between drops in x-ledge
c/c Y	Distance between drops in y-ledge
T	Thickness of manifold
Feed	Feed channel
L	Lenght
V	Total Volume of feed channels
W	Wattage
CL	Centre line

At c/c Y120 mm:
Delivered with band heater B030018100

Vid c/c 120 mm:
Levereras med värmeband B030018100

At c/c Y140 mm and above:
Delivered with band heater B030018100, cartridges T0603080

Vid c/c Y140 mm och större:
Levereras med värmeband B030018100,värmepatroner T0603080

Date: 031002, © LKM Heatlock Co Ltd

This Heatlock series, below, is currently being replaced by the A1-series of nozzles.
Before you design check availability, stock is gradually decreased.
Spare parts will be available until at least end of 2007 (apart form NPT threaded)

Feed 6 Heatlock Standard Manifold

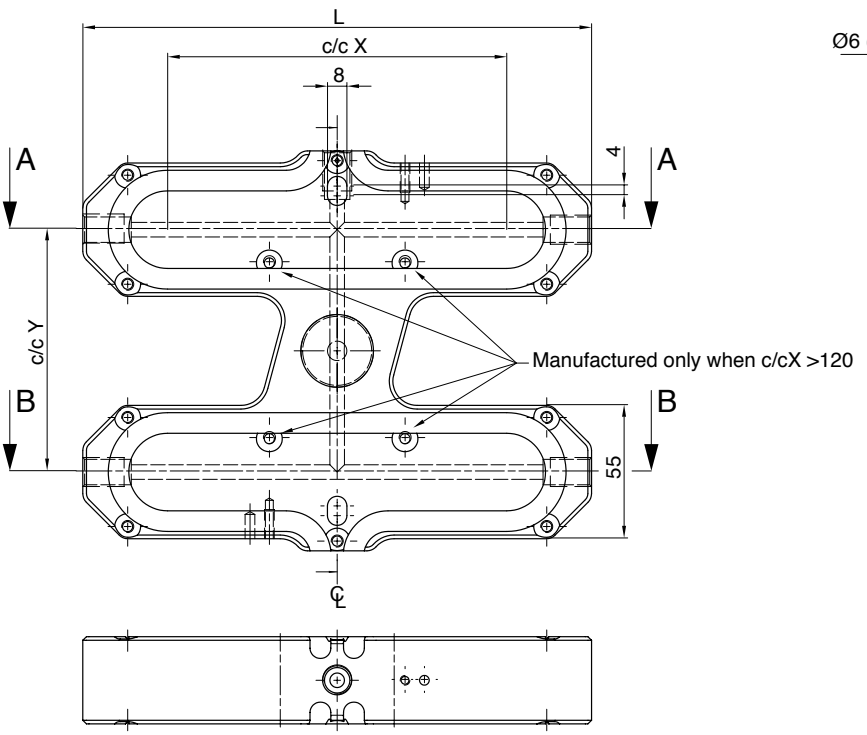

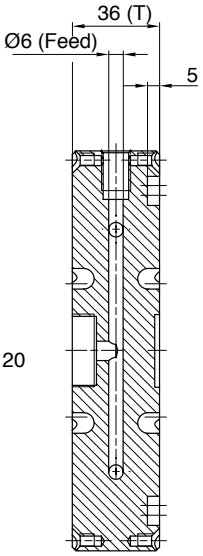

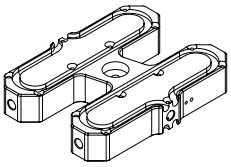

Customer Notes / Noteringar av kund

Note: cc X and cc Y is max. distances between every drop. Specify your dim's and moulded material, below. We will adjust manifold dim's accordingly. Default moulding temp. 200°C if nothing else noted.

Obs: cc X och cc Y anger max. avstånd mellan varje drop. Ange önskade mått och material som skall sprutas. Vi justerar balkens mått enligt dess temp. Om ingen temp. anges använder vi 200°C som standard.

Manifold Part No.

A - A
B - B
temp. °C / Mat. /

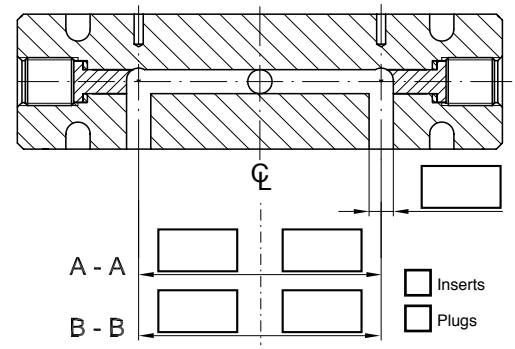

Company	
Name	
Address	
Phone	
Fax	
E-mail	

Technical Data / Teknisk data

Our manifolds are made in material 1.2311/P20/N20. The manifolds are all finished to your *exact* specifications using our pre-configured Heatlock standard. Latest news always available at **www.heatlock.com**

Våra balkar är tillverkade i material 1.2311/P20/N20. Balkarna tillverkas efter dina *exakta* önskemål och följer vår Heatlock standard. För ytterligare information, vänligen kontakta oss. Senaste information finner du alltid på **www.heatlock.com**

Part No.	c/c X	c/c Y	T	Feed		L	V (mm³)
MH00800803606	80	80	36	6		150	13424
MH01000803606	100	80	36	6		170	15684
MH01200803606	120	80	36	6		190	17945
MH01400803606	140	80	36	6		210	20206
MH01600803606	160	80	36	6		230	22466
MH02000803606	200	80	36	6		270	26988
MH02400803606	240	80	36	6		310	31509
MH02800803606	280	80	36	6		350	36031
MH01001003606	100	100	36	6		170	16250
MH01201003606	120	100	36	6		190	18510
MH01401003606	140	100	36	6		210	20771
MH01601003606	160	100	36	6		230	23031
MH02001003606	200	100	36	6		270	27553
MH02401003606	240	100	36	6		310	32075
MH02801003606	280	100	36	6		350	36597
MH01201203606	120	120	36	6		190	19076
MH01401203606	140	120	36	6		210	21336
MH01601203606	160	120	36	6		230	23597
MH02001203606	200	120	36	6		270	28119
MH02401203606	240	120	36	6		310	32640
MH02801203606	280	120	36	6		350	37162
MH01401403606	140	140	36	6		210	21902
MH01601403606	160	140	36	6		230	24162
MH02001403606	200	140	36	6		270	28685
MH02401403606	240	140	36	6		310	33206
MH02801403606	280	140	36	6		350	37727

This Heatlock series, below, is currently being replaced by the A1-series of nozzles.
Before you design check availability, stock is gradually decreased.
Spare parts will be available until the end of 2009 and beyond upon request.

Feed 8 Heatlock Standard Manifold

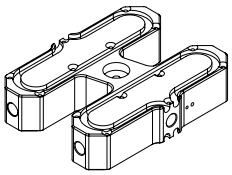

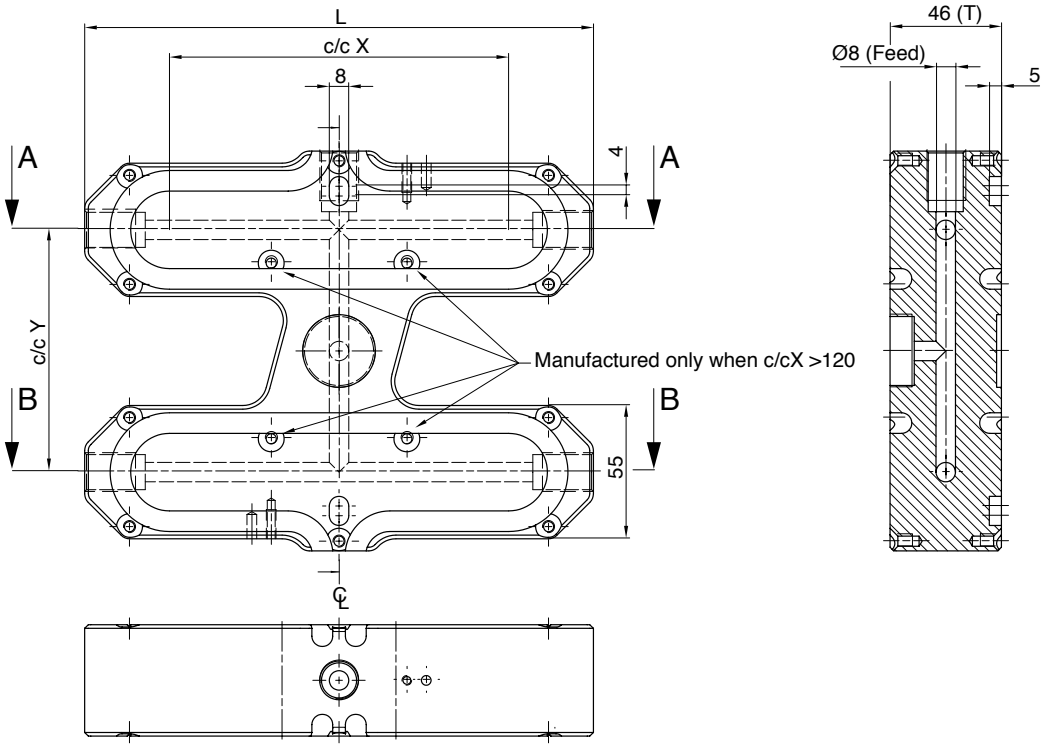

Customer Notes / Noteringar av kund

Note: cc X and cc Y is max. distances between every drop. Specify your dim's and moulded material, below. We will adjust manifold dim's accordingly. Default moulding temp. 200°C if nothing else noted.

Obs: cc X och cc Y anger max. avstånd mellan varje drop. Ange önskade mått och material som skall sprutas. Vi justerar balkens mått enligt dess temp. Om ingen temp. anges använder vi 200°C som standard.

Manifold Part No.

A - A
B - B

temp. °C / Mat. /

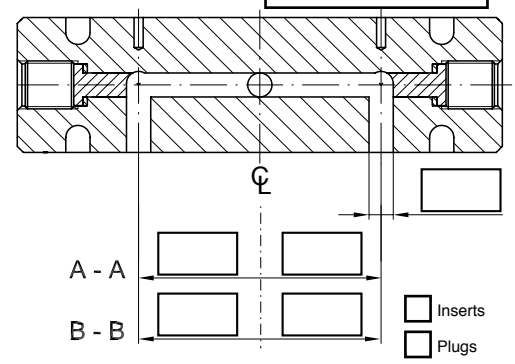

Company	
Name	
Address	
Phone	
Fax	
E-mail	

Technical Data / Teknisk data

Our manifolds are made in material 1.2311/P20/N20. The manifolds are all finished to your *exact* specifications using our pre-configured Heatlock standard. Latest news always available at **www.heatlock.com**

Våra balkar är tillverkade i material 1.2311/P20/N20. Balkarna tillverkas efter dina *exakta* önskemål och följer vår Heatlock standard. För ytterligare information, vänligen kontakta oss. Senaste information finner du alltid på **www.heatlock.com**

Part No.	c/c X	c/c Y	T	Feed		L	V (mm³)
MH00800804608	80	80	46	8		150	24869
MH01000804608	100	80	46	8		170	28888
MH01200804608	120	80	46	8		190	32907
MH01400804608	140	80	46	8		210	36926
MH01600804608	160	80	46	8		230	40945
MH02000804608	200	80	46	8		270	48984
MH02400804608	240	80	46	8		310	57022
MH02800804608	280	80	46	8		350	65061
MH01001004608	100	100	46	8		170	29893
MH01201004608	120	100	46	8		190	33912
MH01401004608	140	100	46	8		210	37931
MH01601004608	160	100	46	8		230	41950
MH02001004608	200	100	46	8		270	49989
MH02401004608	240	100	46	8		310	58027
MH02801004608	280	100	46	8		350	66066
MH01201204608	120	120	46	8		190	34917
MH01401204608	140	120	46	8		210	38936
MH01601204608	160	120	46	8		230	42955
MH02001204608	200	120	46	8		270	50994
MH02401204608	240	120	46	8		310	59032
MH02801204608	280	120	46	8		350	67070
MH01401404608	140	140	46	8		210	39941
MH01601404608	160	140	46	8		230	43960
MH02001404608	200	140	46	8		270	51998
MH02401404608	240	140	46	8		310	60037
MH02801404608	280	140	46	8		350	68075

Date: 031002, © LKM Heatlock Co Ltd

This Heatlock series, below, is currently being replaced by the A1-series of nozzles.
Before you design check availability, stock is gradually decreased.
Spare parts will be available until at least end of 2007 (apart form NBT1 bodies)

Feed 10 Heatlock Standard Manifold

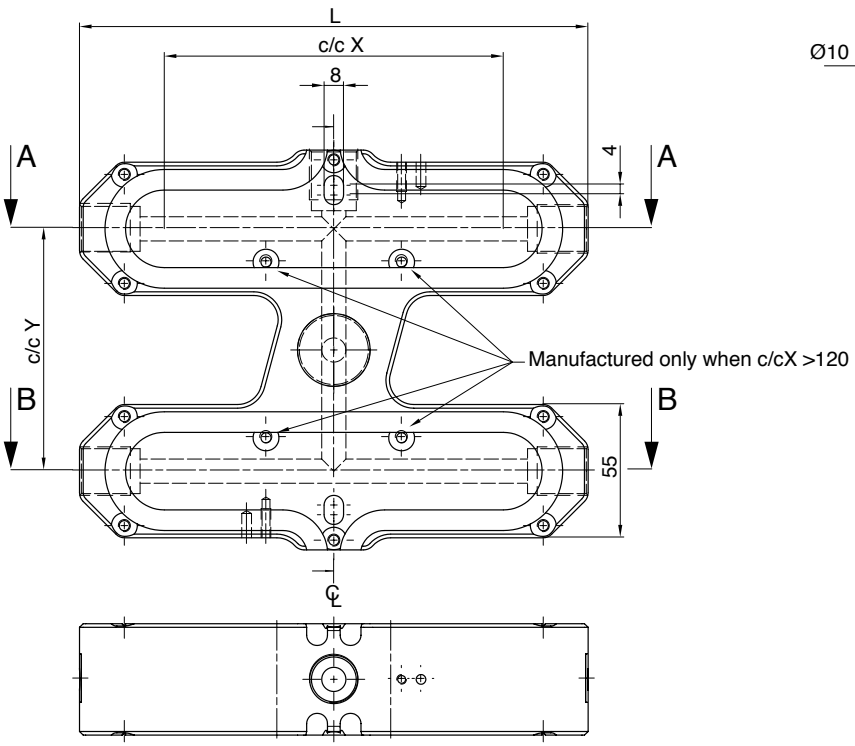

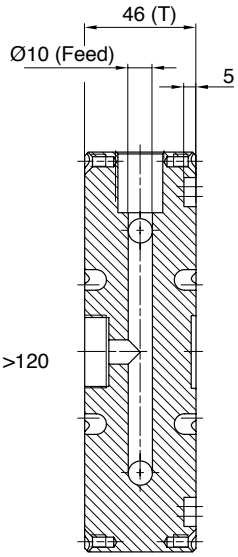

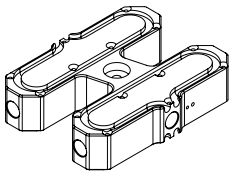

Customer Notes / Noteringar av kund

Note: cc X and cc Y is max. distances between every drop. Specify your dim's and moulded material, below. We will adjust manifold dim's accordingly. Default moulding temp. 200°C if nothing else noted.

Obs: cc X och cc Y anger max. avstånd mellan varje drop. Ange önskade mått och material som skall sprutas. Vi justerar balkens mått enligt dess temp. Om ingen temp. anges använder vi 200°C som standard.

Manifold Part No.

A - A
B - B

temp. °C / Mat. /

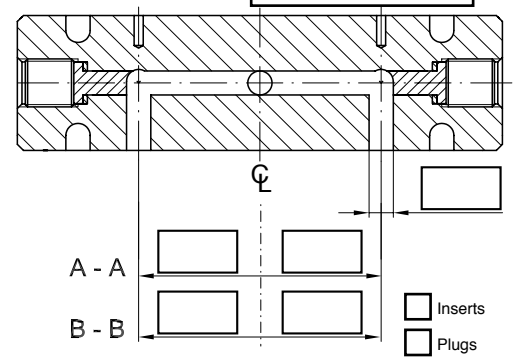

Company	
Name	
Address	
Phone	
Fax	
E-mail	

Technical Data / Teknisk data

Our manifolds are made in material 1.2311/P20/N20. The manifolds are all finished to your *exact* specifications using our pre-configured Heatlock standard. Latest news always available at **www.heatlock.com**

Våra balkar är tillverkade i material 1.2311/P20/N20. Balkarna tillverkas efter dina *exakta* önskemål och följer vår Heatlock standard. För ytterligare information, vänligen kontakta oss. Senaste information finner du alltid på **www.heatlock.com**

Part No.	c/c X	c/c Y	T	Feed		L	V (mm³)
MH00800804610	80	80	46	10		150	38465
MH01000804610	100	80	46	10		170	44745
MH01200804610	120	80	46	10		190	51025
MH01400804610	140	80	46	10		210	57305
MH01600804610	160	80	46	10		230	63585
MH02000804610	200	80	46	10		270	76145
MH02400804610	240	80	46	10		310	88705
MH02800804610	280	80	46	10		350	101265
MH01001004610	100	100	46	10		170	52595
MH01201004610	120	100	46	10		190	58875
MH01401004610	140	100	46	10		210	65155
MH01601004610	160	100	46	10		230	77715
MH02001004610	200	100	46	10		270	90275
MH02401004610	240	100	46	10		310	102835
MH02801004610	280	100	46	10		350	105975
MH01201204610	120	120	46	10		190	54165
MH01401204610	140	120	46	10		210	60445
MH01601204610	160	120	46	10		230	66725
MH02001204610	200	120	46	10		270	79285
MH02401204610	240	120	46	10		310	91845
MH02801204610	280	120	46	10		350	104405
MH01401404610	140	140	46	10		210	62015
MH01601404610	160	140	46	10		230	68295
MH02001404610	200	140	46	10		270	80855
MH02401404610	240	140	46	10		310	93415
MH02801404610	280	140	46	10		350	105975

This Heatlock series, below, is currently being replaced by the A1-series of nozzles.
Before you design check availability, stock is gradually decreased.
Spare parts will be available for a period of 2005 (except for the MH1 bodies)

Feed 12 Heatlock Standardbalk

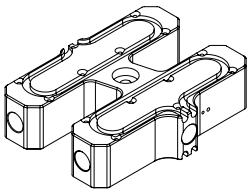

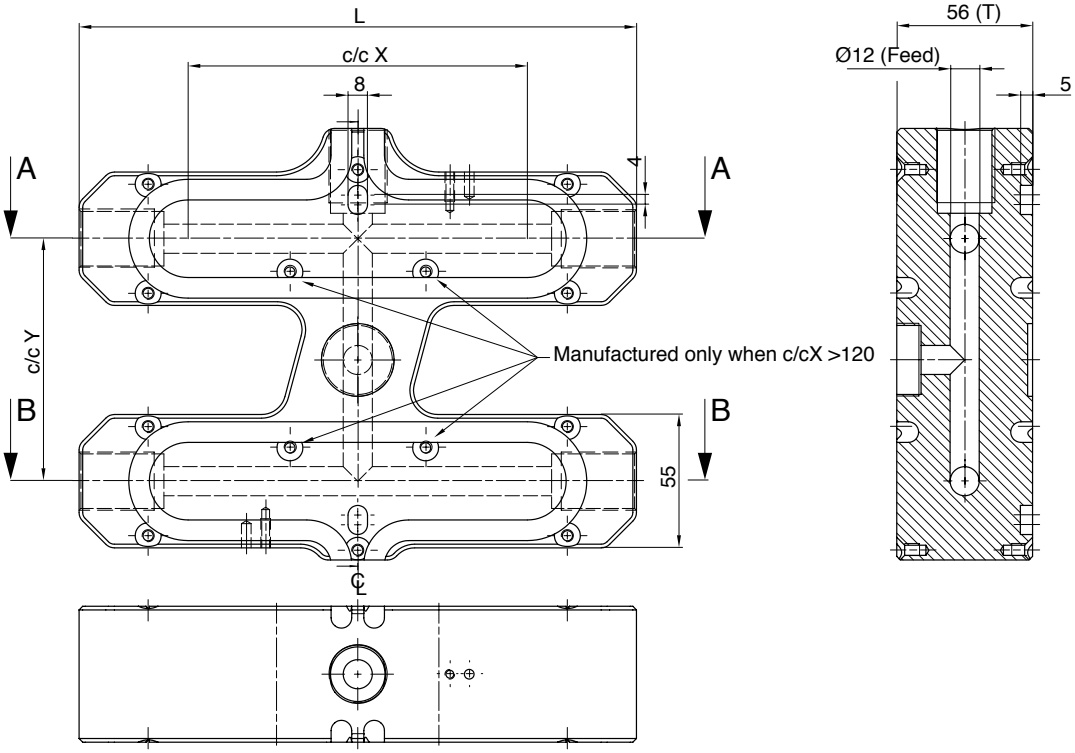

Customer Notes / Noteringar av kund

Note: cc X and cc Y is max. distances between every drop. Specify your dim's and moulded material, below. We will adjust manifold dim's accordingly. Default moulding temp. 200°C if nothing else noted.

Obs: cc X och cc Y anger max. avstånd mellan varje drop. Ange önskade mått och material som skall sprutas. Vi justerar balkens mått enligt dess temp. Om ingen temp. anges använder vi 200°C som standard.

Manifold Part No.

A - A

B - B

temp. °C / Mat. /

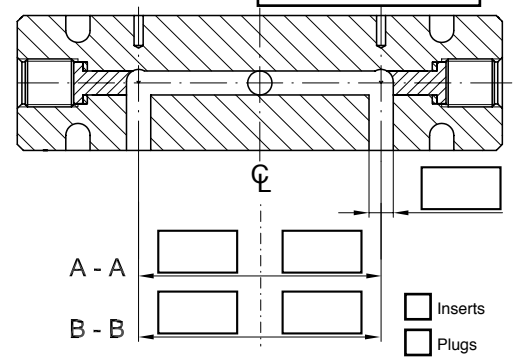

Company	
Name	
Address	
Phone	
Fax	
E-mail	

Technical Data / Teknisk data

Our manifolds are made in material 1.2311/P20/N20. The manifolds are all finished to your *exact* specifications using our pre-configured Heatlock standard. Latest news always available at **www.heatlock.com**

Våra balkar är tillverkade i material 1.2311/P20/N20. Balkarna tillverkas efter dina *exakta* önskemål och följer vår Heatlock standard. För ytterligare information, vänligen kontakta oss. Senaste information finner du alltid på **www.heatlock.com**

Part No.	c/c X	c/c Y	T	Feed		L	V (mm³)
MH00800805612	80	80	56	12		170	57650
MH01000805612	100	80	56	12		190	66694
MH01200805612	120	80	56	12		210	75737
MH01400805612	140	80	56	12		230	84780
MH01600805612	160	80	56	12		250	93823
MH02000805612	200	80	56	12		290	111910
MH02400805612	240	80	56	12		330	129996
MH02800805612	280	80	56	12		370	148082
MH01001005612	100	100	56	12		190	66694
MH01201005612	120	100	56	12		210	75737
MH01401005612	140	100	56	12		230	84780
MH01601005612	160	100	56	12		250	93823
MH02001005612	200	100	56	12		290	111910
MH02401005612	240	100	56	12		330	129996
MH02801005612	280	100	56	12		370	148082
MH01201205612	120	120	56	12		210	77998
MH01401205612	140	120	56	12		230	87041
MH01601205612	160	120	56	12		250	96084
MH02001205612	200	120	56	12		290	114170
MH02401205612	240	120	56	12		330	132256
MH02801205612	280	120	56	12		370	150343
MH01401405612	140	140	56	12		230	91562
MH01601405612	160	140	56	12		250	100606
MH02001405612	200	140	56	12		290	118692
MH02401405612	240	140	56	12		330	136778
MH02801405612	280	140	56	12		370	154865

Date: 031002, © LKM Heatlock Co Ltd

This Heatlock series, below, is currently being replaced by the A1-series of nozzles.
Before you design check availability, stock is gradually decreased.
Spare parts will be available until at least end of 2007 (apart form NPT1 bodies)

Feed 14 Heatlock Standardbalk

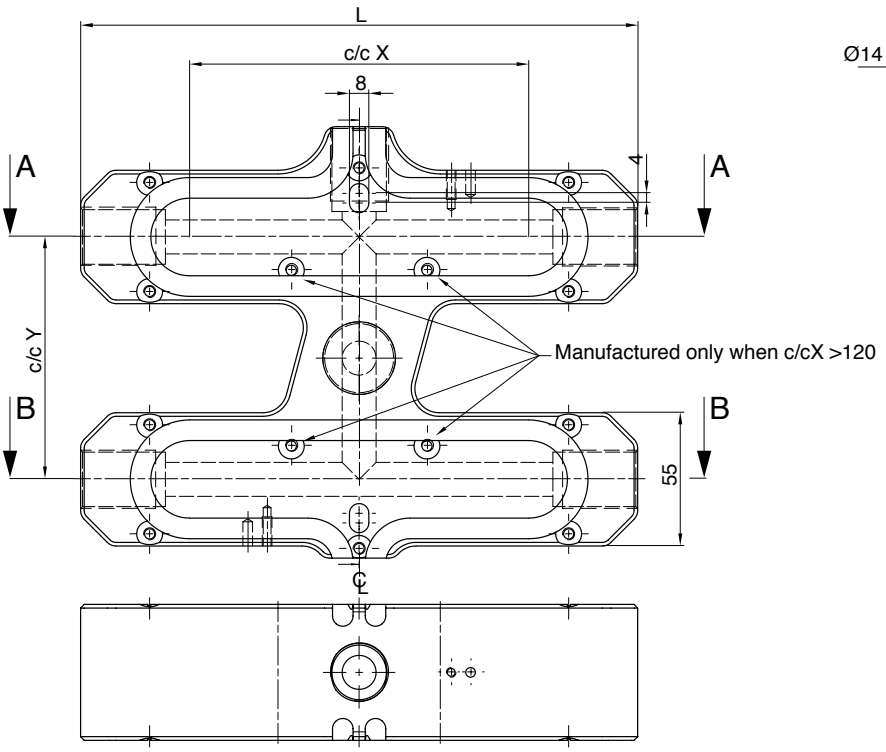

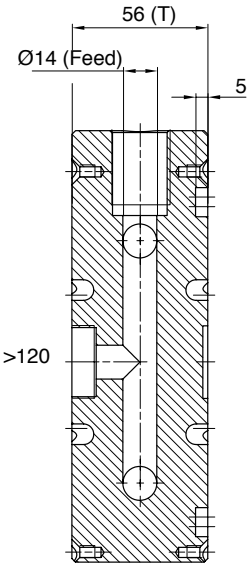

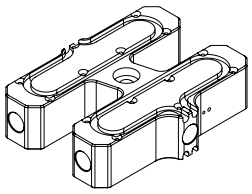

Customer Notes / Noteringar av kund

Note: cc X and cc Y is max. distances between every drop. Specify your dim's and moulded material, below. We will adjust manifold dim's accordingly. Default moulding temp. 200°C if nothing else noted.

Obs: cc X och cc Y anger max. avstånd mellan varje drop. Ange önskade mått och material som skall sprutas. Vi justerar balkens mått enligt dess temp. Om ingen temp. anges använder vi 200°C som standard.

Manifold Part No.

A - A
B - B

temp. °C / Mat. /

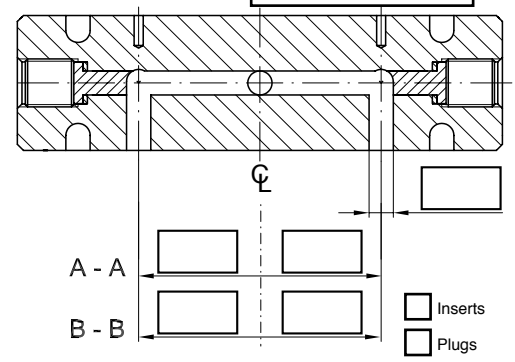

Company	
Name	
Address	
Phone	
Fax	
E-mail	

Technical Data / Teknisk data

Our manifolds are made in material 1.2311/P20/N20. The manifolds are all finished to your *exact* specifications using our pre-configured Heatlock standard. Latest news always available at **www.heatlock.com**

Våra balkar är tillverkade i material 1.2311/P20/N20. Balkarna tillverkas efter dina *exakta* önskemål och följer vår Heatlock standard. För ytterligare information, vänligen kontakta oss. Senaste information finner du alltid på **www.heatlock.com**

Part No.	c/c X	c/c Y	T	Feed		L	V (mm³)
MH00800805614	80	80	56	14		170	77699
MH01000805614	100	80	56	14		190	90008
MH01200805614	120	80	56	14		210	102317
MH01400805614	140	80	56	14		230	114626
MH01600805614	160	80	56	14		250	126934
MH02000805614	200	80	56	14		290	151552
MH02400805614	240	80	56	14		330	176169
MH02800805614	280	80	56	14		370	200787
MH01001005614	100	100	56	14		190	93085
MH01201005614	120	100	56	14		210	105394
MH01401005614	140	100	56	14		230	117703
MH01601005614	160	100	56	14		250	130012
MH02001005614	200	100	56	14		290	154629
MH02401005614	240	100	56	14		330	179247
MH02801005614	280	100	56	14		370	203865
MH01201205614	120	120	56	14		210	108471
MH01401205614	140	120	56	14		230	120780
MH01601205614	160	120	56	14		250	133089
MH02001205614	200	120	56	14		290	157706
MH02401205614	240	120	56	14		330	182324
MH02801205614	280	120	56	14		370	206942
MH01401405614	140	140	56	14		230	123857
MH01601405614	160	140	56	14		250	136166
MH02001405614	200	140	56	14		290	160784
MH02401405614	240	140	56	14		330	185401
MH02801405614	280	140	56	14		370	210019

This Heatlock series, below, is currently being replaced by the A1-series of nozzles.
Before you design check availability, stock is gradually decreased.
Spare parts will be available for a few years. [illegible] NOT [illegible]

Feed 16 Heatlock Standard Manifold

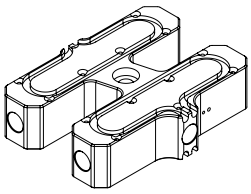

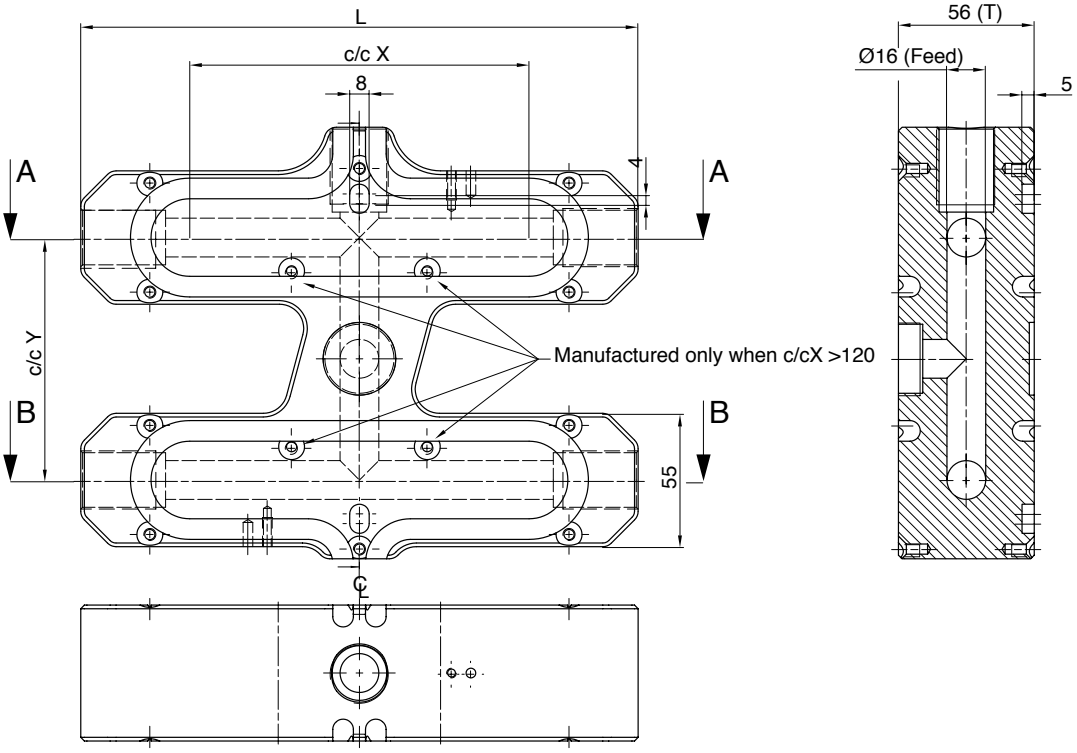

Customer Notes / Noteringar av kund

Note: cc X and cc Y is max. distances between every drop. Specify your dim's and moulded material, below. We will adjust manifold dim's accordingly. Default moulding temp. 200°C if nothing else noted.

Obs: cc X och cc Y anger max. avstånd mellan varje drop. Ange önskade mått och material som skall sprutas. Vi justerar balkens mått enligt dess temp. Om ingen temp. anges använder vi 200°C som standard.

Manifold Part No.

A - A
B - B

temp. °C / Mat. /

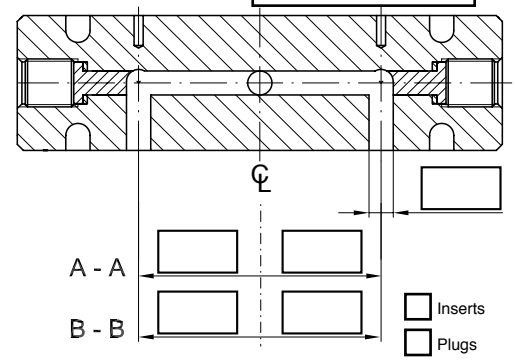

Company	
Name	
Address	
Phone	
Fax	
E-mail	

Technical Data / Teknisk data

Our manifolds are made in material 1.2311/P20/N20. The manifolds are all finished to your *exact* specifications using our pre-configured Heatlock standard. Latest news always available at **www.heatlock.com**

Våra balkar är tillverkade i material 1.2311/P20/N20. Balkarna tillverkas efter dina *exakta* önskemål och följer vår Heatlock standard. För ytterligare information, vänligen kontakta oss. Senaste information finner du alltid på **www.heatlock.com**

Part No.	c/c X	c/c Y	T	Feed		L	V (mm³)
MH00800805616	80	80	56	16		170	100480
MH01000805616	100	80	56	16		190	116557
MH01200805616	120	80	56	16		210	132634
MH01400805616	140	80	56	16		230	148710
MH01600805616	160	80	56	16		250	164787
MH02000805616	200	80	56	16		290	196941
MH02400805616	240	80	56	16		330	229094
MH02800805616	280	80	56	16		370	261248
MH01001005616	100	100	56	16		190	116559
MH01201005616	120	100	56	16		210	132634
MH01401005616	140	100	56	16		230	148710
MH01601005616	160	100	56	16		250	164787
MH02001005616	200	100	56	16		290	196941
MH02401005616	240	100	56	16		330	229094
MH02801005616	280	100	56	16		370	261248
MH01201205616	120	120	56	16		210	136653
MH01401205616	140	120	56	16		230	152727
MH01601205616	160	120	56	16		250	168806
MH02001205616	200	120	56	16		290	200960
MH02401205616	240	120	56	16		330	233114
MH02801205616	280	120	56	16		370	265267
MH01401405616	140	140	56	16		230	160768
MH01601405616	160	140	56	16		250	176845
MH02001405616	200	140	56	16		290	208995
MH02401405616	240	140	56	16		330	241152
MH02801405616	280	140	56	16		370	273306

Date: 031002, © LKM Heatlock Co Ltd

This Heatlock series, below, is currently being replaced by the A1-series of nozzles.
Before you design check availability, stock is gradually decreased.
Spare parts will be available until at least end of 2007 (apart form NPT1 bodies)

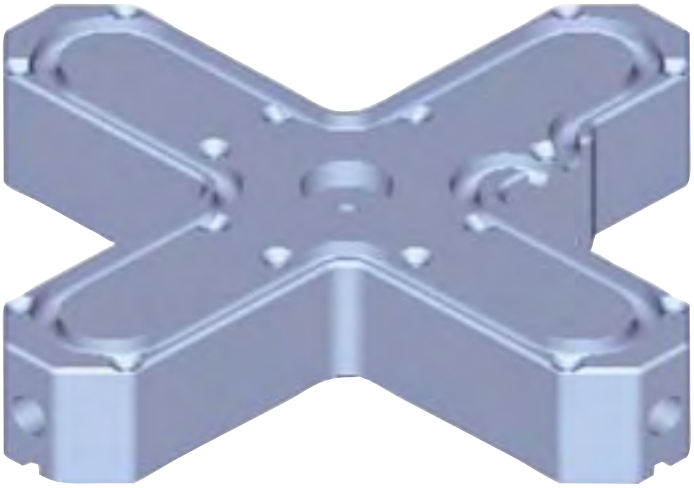

Heatlock Standard Manifold / Heatlock standardbalk

Our range of **Standard Manifolds in X-types** are very comprehensive. They are available in a wide range of lenghts and feed sizes to suite your needs.

Sizes of the cc-dimensions from 60 to 240 mm and feed diameters of 6, 8, 10, 12, 14 and 16 mm are at your choise. The height of the manifolds are 36, 46 or 56 mm, with tolerances within 0,02 mm.

Our manifolds are made of **1.2311/P20/N20**, which is suitable for every common plastic. In regards of further technical qualities we refer to our **QF**-quality standard including our **MI_STD**.

The manifolds are of type ”floated”, centered at the middle with our yellow ceramic, insulated with back supports, also made of ceramic, against the clamping plate. All this is made to keep the heat where it belongs. The ceramic has only 7% of ther conductivity of steel, suitable to insulate between cold and hot components.

For complete location of the manifold, only one additional cylindrical pin is required, which minimize the heat loss. To achieve a even heat within the manifold we use tubular heaters, one at each side.

All Heatlock Standard Manifolds are delivered to you within 3 weeks. If you need manifolds not included in our standard range we have the possibility to make custom made manifolds, also within 3 weeks.

Vår serie **standardbalkar** i **X**-utförande är mycket bred. De finns i en mängd olika längder och med olika flytkanalsstorlekar för att passa Ditt behov.

Storlekarna varierar med ett centrumavstånd mellan bussningarna på 60 till 240mm,där Du väljer en flytkanalsstorlek som passar, finns i steg om 6, 8, 10, 12, 14 och 16 mm. Höjden på balkarna för dessa flytkanalsstorlekar ligger på 36, 46 och 56 mm, och håller en tolerans inom 0,02mm.

Balkarna är gjorda i material **1.2311/P20/N20** som väl täcker kravet för att passa de flesta plaster, för övrigt vad gäller den tekniska kvalitén hänvisar vi till vårt **QF** där vår **MI_STD** ingår.

Balkarna är av typen ”flytande”, centrerade i mitten med vår Gula Keramik, isolerade med Bakre stöd mot fästplattan, även dessa naturligtvis gjorda utav Keramik enkom för att behålla värmen där den hör hemma. Keramiken har endast 7 % av stålets värmeledningsförmåga varför det med fördel används för att isolera kalla och varma detaljer från varandra.

Balkarna vridfixeras med hjälp utav en cylindrisk pinne, allt för att minimera värmeöverföring. För att erhålla en jämn värme över hela balken använder vi oss utav runda ipressade element, ett på var sida.

Balkarna levereras komplett färdiga inom 3 veckor, och skulle någon av dessa balkar inte passa just ditt projekt, tar vi fram en specialbalk för ditt ändamål även denna inom 3 veckor.

This Heatlock series, below, is currently being replaced by the A1-series of nozzles.
Before you design check availability, stock is gradually decreased.
Spare parts will be available until Dec end of 2007 (except for MX11 bodies)

Heatlock Standard Manifold

Design of the following sizes:
Utförande i följande storlekar:
MX0060...-MX0100... feed Ø6 - 10

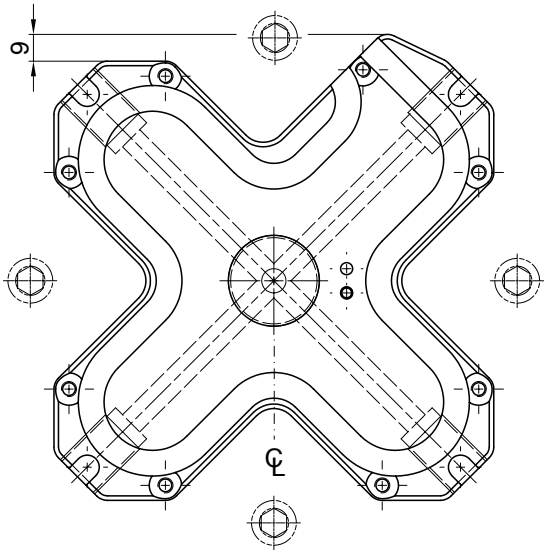

Design of the following sizes:
Utförande i följande storlekar:
MX0120...-MX0240... feed Ø06 - 12

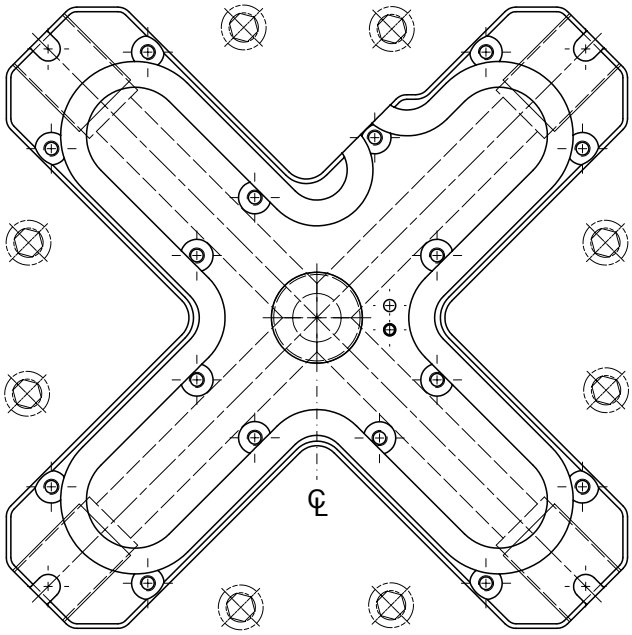

Recommendation
To avoid any leakage, we recommend you to increase the number of bolts, according to the drawing to the left. The bolts should be placed over the centre of every nozzle, as close as possible to the manifold (leave a space of 15 mm).

Rekommendation
För att förhindra eventuella läckage kan man med fördel placera extra bultar enligt riningen till vänster. Dessa bör placeras mitt för bussningarnas respektive centrum, så nära balken som möjligt (lämna 15 mm runt om).

Tightening torque Nm, distribution of applied torque + - 5%. Quality 12.9	
Size	**Torque Nm**
M8	40
M10	79
M12	136
M16	333
M20	649

Explanation of measure abbreviations	
Abb	**Explanation**
c/c X	Distance between drops in x-ledge
c/c Y	Distance between drops in y-ledge
T	Thickness of manifold
Feed	Feed channel
L	Lenght
V	Total Volume of feed channels
W	Wattage
CL	Centre line

Date: 031002, © LKM Heatlock Co Ltd

This Heatlock series, below, is currently being replaced by the A1-series of nozzles.
Before you design check availability, stock is gradually decreased.
Spare parts will be available until at least end of 2007 (apart form NPT threaded)

Feed 6 Heatlock Standard Manifold

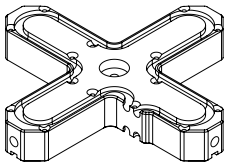

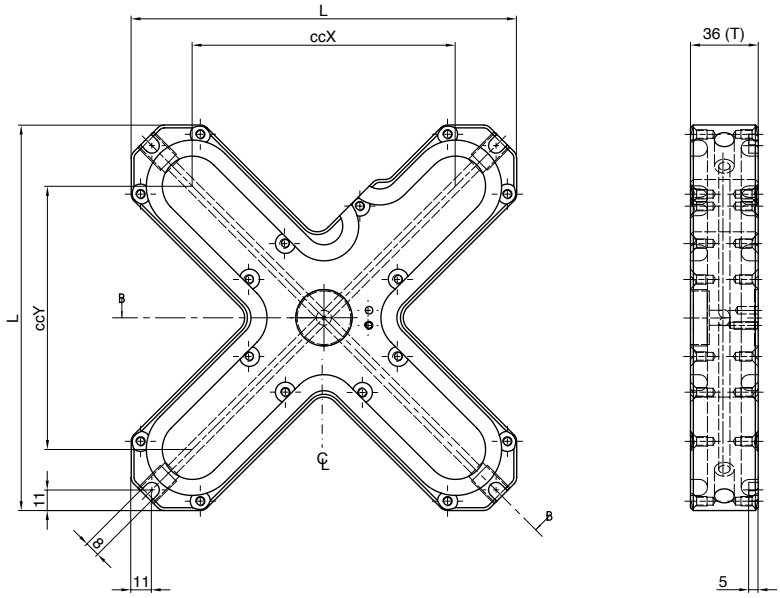

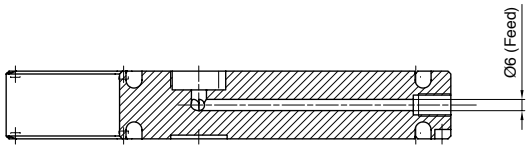

Technical Data / Teknisk data

Our manifolds are made in material 1.2311/P20/N20. The manifolds are all finished to your *exact* specifications using our pre-configured Heatlock standard. Latest news always available at **www.heatlock.com**

Våra balkar är tillverkade i material 1.2311/P20/N20. Balkarna tillverkas efter dina *exakta* önskemål och följer vår Heatlock standard. För ytterligare information, vänligen kontakta oss. Senaste information finner du alltid på **www.heatlock.com**

Part No.	c/c X	c/c Y	T	Feed		L	V (mm³)
MX00600603606	60	60	36	6		125	6359
MX00800803606	80	80	36	6		145	7489
MX01001003606	100	100	36	6		165	8619
MX01201203606	120	120	36	6		185	9750
MX01401403606	140	140	36	6		205	10880
MX01601603606	160	160	36	6		225	13141
MX02002003606	200	200	36	6		265	15402
MX02402403606	240	240	36	6		305	17663

Note: cc X and cc Y is max. distances between every drop. Specify your dim's and moulded material, below. We will adjust manifold dim's accordingly. Default moulding temp. 200°C if nothing else noted.

Obs: cc X och cc Y anger max. avstånd mellan varje drop. Ange önskade mått och material som skall sprutas. Vi justerar balkens mått enligt dess temp. Om ingen temp. anges använder vi 200°C som standard.

Customer Notes / Noteringar av kund

Manifold Part No. | temp. °C / Mat.

/

☐ Inserts
☐ Plugs

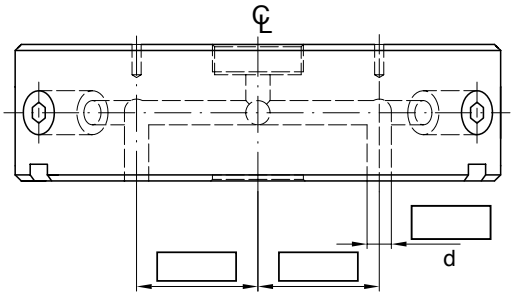

When ordering, fill in dimensions and fax your local distributor.
Vid beställning, fyll i mått och faxa in din beställning till oss.

Company	
Name	
Address	
Phone	
Fax	
E-mail	

This Heatlock series, below, is currently being replaced by the A1-series of nozzles.
Before you design check availability, stock is gradually decreased.
Spare parts will be available until the end of 2025 and beyond UPON REQUEST.

Feed 8 Heatlock Standard Manifold

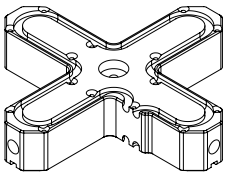

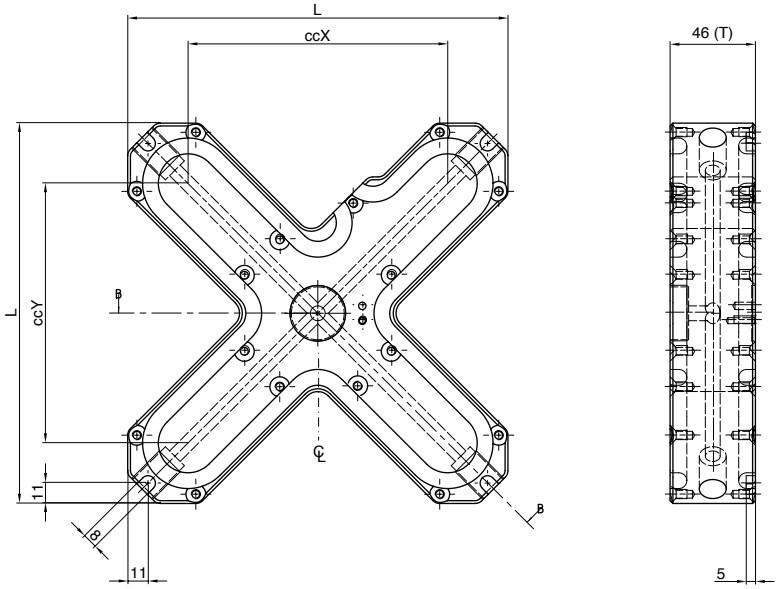

Technical Data / Teknisk data

Our manifolds are made in material 1.2311/P20/N20. The manifolds are all finished to your *exact* specifications using our pre-configured Heatlock standard. Latest news always available at **www.heatlock.com**

Våra balkar är tillverkade i material 1.2311/P20/N20. Balkarna tillverkas efter dina *exakta* önskemål och följer vår Heatlock standard. För ytterligare information, vänligen kontakta oss. Senaste information finner du alltid på **www.heatlock.com**

Part No.	c/c X	c/c Y	T	Feed		L	V (mm³)
MX00600604608	60	60	46	8		125	12309
MX00800804608	80	80	46	8		145	14318
MX01001004608	100	100	46	8		165	16328
MX01201204608	120	120	46	8		185	18338
MX01401404608	140	140	46	8		205	20347
MX01601604608	160	160	46	8		225	24366
MX02002004608	200	200	46	8		265	28386
MX02402404608	240	240	46	8		305	32405

Note: cc X and cc Y is max. distances between every drop. Specify your dim's and moulded material, below. We will adjust manifold dim's accordingly. Default moulding temp. 200°C if nothing else noted.

Obs: cc X och cc Y anger max. avstånd mellan varje drop. Ange önskade mått och material som skall sprutas. Vi justerar balkens mått enligt dess temp. Om ingen temp. anges använder vi 200°C som standard.

Customer Notes / Noteringar av kund

Manifold Part No. _____ temp. °C / Mat. / ☐ Inserts ☐ Plugs

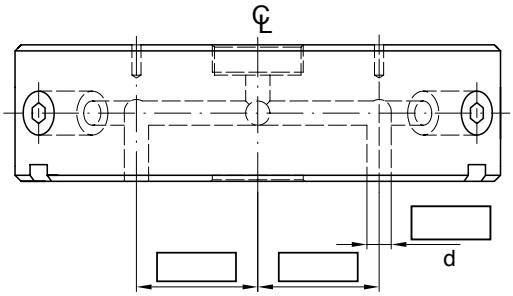

When ordering, fill in dimensions and fax your local distributor.
Vid beställning, fyll i mått och faxa in din beställning till oss.

Company	
Name	
Address	
Phone	
Fax	
E-mail	

Date: 031002, © LKM Heatlock Co Ltd

This Heatlock series, below, is currently being replaced by the A1-series of nozzles.
Before you design check availability, stock is gradually decreased.
Spare parts will be available until at least end of 2007 (apart form NEST bodies)

Feed 10 Heatlock Standard Manifold

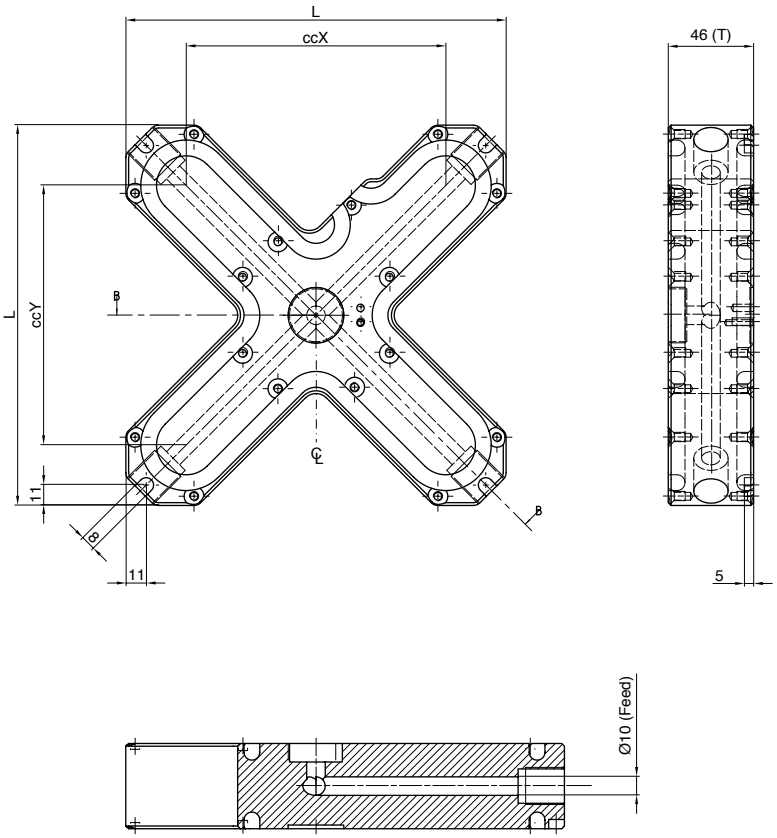

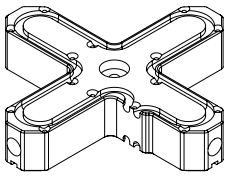

Technical Data / Teknisk data

Our manifolds are made in material 1.2311/P20/N20. The manifolds are all finished to your *exact* specifications using our pre-configured Heatlock standard. Latest news always available at **www.heatlock.com**

Våra balkar är tillverkade i material 1.2311/P20/N20. Balkarna tillverkas efter dina *exakta* önskemål och följer vår Heatlock standard. För ytterligare information, vänligen kontakta oss. Senaste information finner du alltid på **www.heatlock.com**

Part No.	c/c X	c/c Y	T	Feed		L	V (mm³)
MX00600604610	60	60	46	10		125	18840
MX00800804610	80	80	46	10		145	21980
MX01001004610	100	100	46	10		165	25120
MX01201204610	120	120	46	10		185	28260
MX01401404610	140	140	46	10		205	31400
MX01601604610	160	160	46	10		225	37680
MX02002004610	200	200	46	10		265	43960
MX02402404610	240	240	46	10		305	50240

Note: cc X and cc Y is max. distances between every drop. Specify your dim's and moulded material, below. We will adjust manifold dim's accordingly. Default moulding temp. 200°C if nothing else noted.

Obs: cc X och cc Y anger max. avstånd mellan varje drop. Ange önskade mått och material som skall sprutas. Vi justerar balkens mått enligt dess temp. Om ingen temp. anges använder vi 200°C som standard.

Customer Notes / Noteringar av kund

Manifold Part No. _____ temp. °C / Mat. _____ / _____

☐ Inserts
☐ Plugs

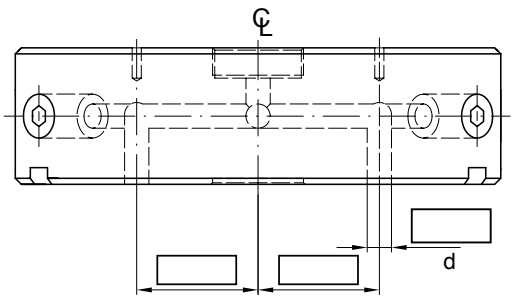

When ordering, fill in dimensions and fax your local distributor.
Vid beställning, fyll i mått och faxa in din beställning till oss.

Company	
Name	
Address	
Phone	
Fax	
E-mail	

This Heatlock series, below, is currently being replaced by the A1-series of nozzles.
Before you design, check availability, stock is gradually decreased.
Spare parts will be available until at least end of 2007 (apart form NPT bodies)

Feed 12 Heatlock Standard Manifold

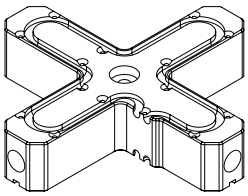

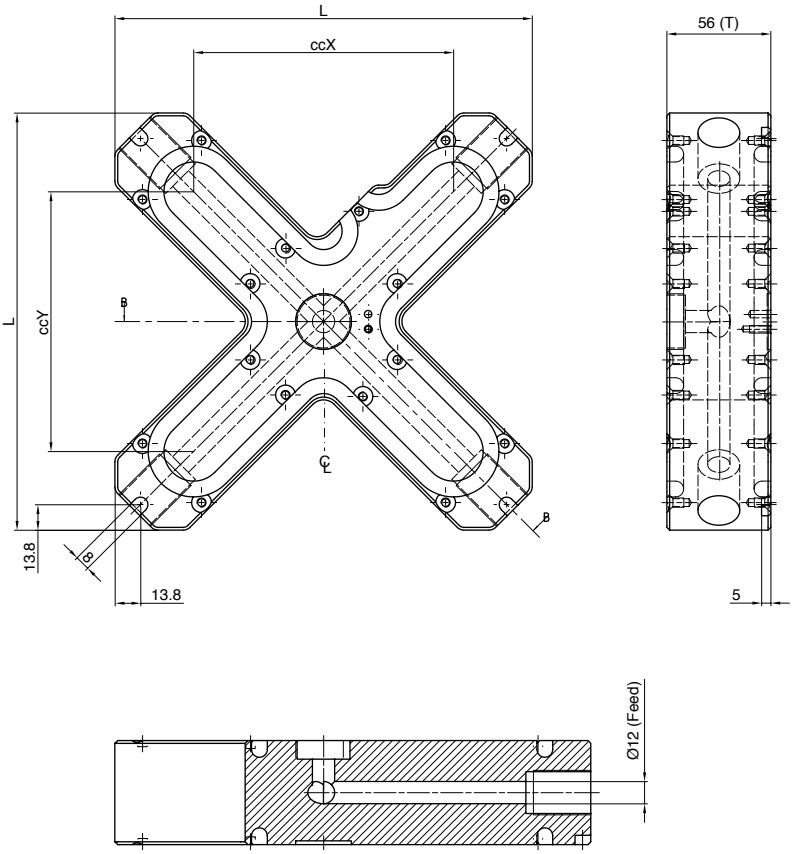

Technical Data / Teknisk data

Our manifolds are made in material 1.2311/P20/N20. The manifolds are all finished to your *exact* specifications using our pre-configured Heatlock standard. Latest news always available at **www.heatlock.com**

Våra balkar är tillverkade i material 1.2311/P20/N20. Balkarna tillverkas efter dina *exakta* önskemål och följer vår Heatlock standard. För ytterligare information, vänligen kontakta oss. Senaste information finner du alltid på **www.heatlock.com**

Part No.	c/c X	c/c Y	T	Feed		L	V (mm³)
MX01201205612	120	120	56	12		205	38434
MX01401405612	140	140	56	12		225	42955
MX01601605612	160	160	56	12		245	47477
MX02002005612	200	200	56	12		285	56520
MX02402405612	240	240	56	12		325	65563

Note: cc X and cc Y is max. distances between every drop. Specify your dim's and moulded material, below. We will adjust manifold dim's accordingly. Default moulding temp. 200°C if nothing else noted.

Obs: cc X och cc Y anger max. avstånd mellan varje drop. Ange önskade mått och material som skall sprutas. Vi justerar balkens mått enligt dess temp. Om ingen temp. anges använder vi 200°C som standard.

Customer Notes / Noteringar av kund

Manifold Part No. _____ temp. °C / Mat. / ☐ Inserts ☐ Plugs

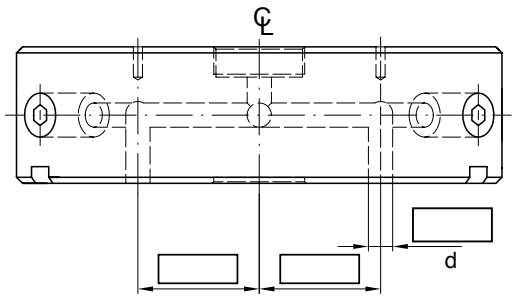

When ordering, fill in dimensions and fax your local distributor.
Vid beställning, fyll i mått och faxa in din beställning till oss.

Company	
Name	
Address	
Phone	
Fax	
E-mail	

Date: 031002, © LKM Heatlock Co Ltd

This Heatlock series, below, is currently being replaced by the A1-series of nozzles.
Before you design check availability, stock is gradually decreased.
Spare parts will be available until at least end of 2007 (apart form NPTY bodies)

Feed 14 Heatlock Standard Manifold

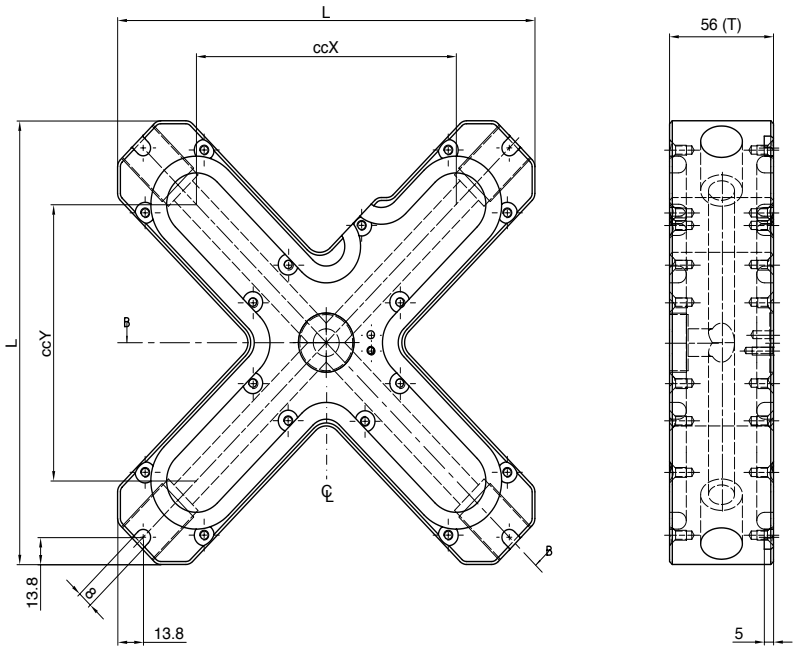

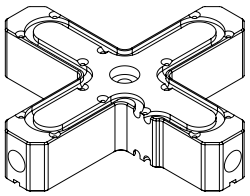

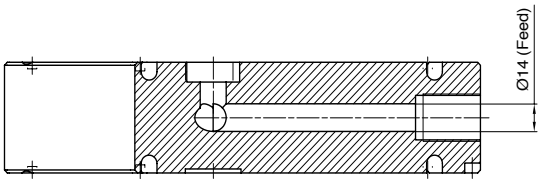

Technical Data / Teknisk data

Our manifolds are made in material 1.2311/P20/N20. The manifolds are all finished to your *exact* specifications using our pre-configured Heatlock standard. Latest news always available at **www.heatlock.com**

Våra balkar är tillverkade i material 1.2311/P20/N20. Balkarna tillverkas efter dina *exakta* önskemål och följer vår Heatlock standard. För ytterligare information, vänligen kontakta oss. Senaste information finner du alltid på **www.heatlock.com**

Part No.	c/c X	c/c Y	T	Feed		L	V (mm³)
MX01201205614	120	120	56	14		205	51543
MX01401405614	140	140	56	14		225	57698
MX01601605614	160	160	56	14		245	63852
MX02002005614	200	200	56	14		285	76161
MX02402405614	240	240	56	14		325	88470

Note: cc X and cc Y is max. distances between every drop. Specify your dim's and moulded material, below. We will adjust manifold dim's accordingly. Default moulding temp. 200°C if nothing else noted.

Obs: cc X och cc Y anger max. avstånd mellan varje drop. Ange önskade mått och material som skall sprutas. Vi justerar balkens mått enligt dess temp. Om ingen temp. anges använder vi 200°C som standard.

Customer Notes / Noteringar av kund

Manifold Part No. _____ temp. °C / Mat. / ☐ Inserts ☐ Plugs

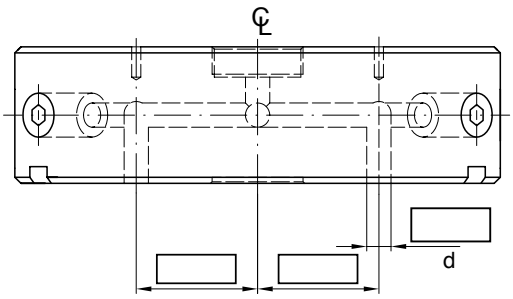

When ordering, fill in dimensions and fax your local distributor.
Vid beställning, fyll i mått och faxa in din beställning till oss.

Company	
Name	
Address	
Phone	
Fax	
E-mail	

This Heatlock series, below, is currently being replaced by the A1-series of nozzles.
Before you design check availability, stock is gradually decreased.
Spare parts will be available for a few years. [illegible]

Feed 16 Heatlock Standard Manifold

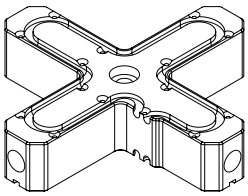

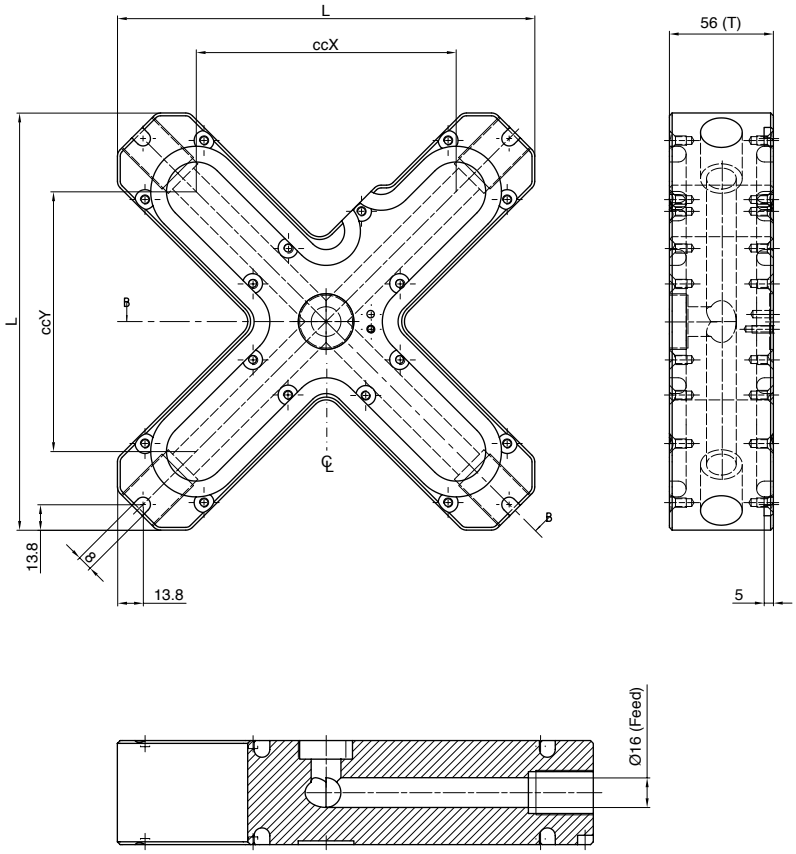

Technical Data / Teknisk data

Our manifolds are made in material 1.2311/P20/N20. The manifolds are all finished to your *exact* specifications using our pre-configured Heatlock standard. Latest news always available at **www.heatlock.com**

Våra balkar är tillverkade i material 1.2311/P20/N20. Balkarna tillverkas efter dina *exakta* önskemål och följer vår Heatlock standard. För ytterligare information, vänligen kontakta oss. Senaste information finner du alltid på **www.heatlock.com**

Part No.	c/c X	c/c Y	T	Feed		L	V (mm³)
MX01201205616	120	120	56	16		205	66317
MX01401405616	140	140	56	16		225	74355
MX01601605616	160	160	56	16		245	82394
MX02002005616	200	200	56	16		285	98470
MX02402405616	240	240	56	16		325	114547

Note: cc X and cc Y is max. distances between every drop. Specify your dim's and moulded material, below. We will adjust manifold dim's accordingly. Default moulding temp. 200°C if nothing else noted.

Obs: cc X och cc Y anger max. avstånd mellan varje drop. Ange önskade mått och material som skall sprutas. Vi justerar balkens mått enligt dess temp. Om ingen temp. anges använder vi 200°C som standard.

Customer Notes / Noteringar av kund

Manifold Part No. _____ temp. °C / Mat. / ☐ Inserts ☐ Plugs

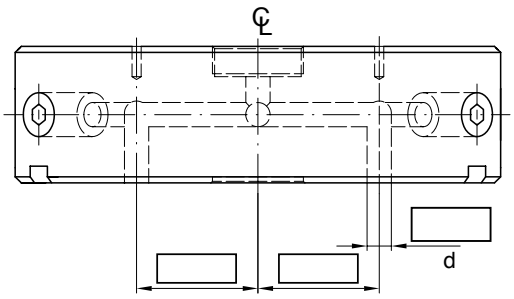

When ordering, fill in dimensions and fax your local distributor.
Vid beställning, fyll i mått och faxa in din beställning till oss.

Company	
Name	
Address	
Phone	
Fax	
E-mail	

Date: 031002, © LKM Heatlock Co Ltd

This Heatlock series, below, is currently being replaced by the A1-series of nozzles.
Before you design check availability, stock is gradually decreased.
Spare parts will be available until at least end of 2007 (apart form NPT1 bodies)

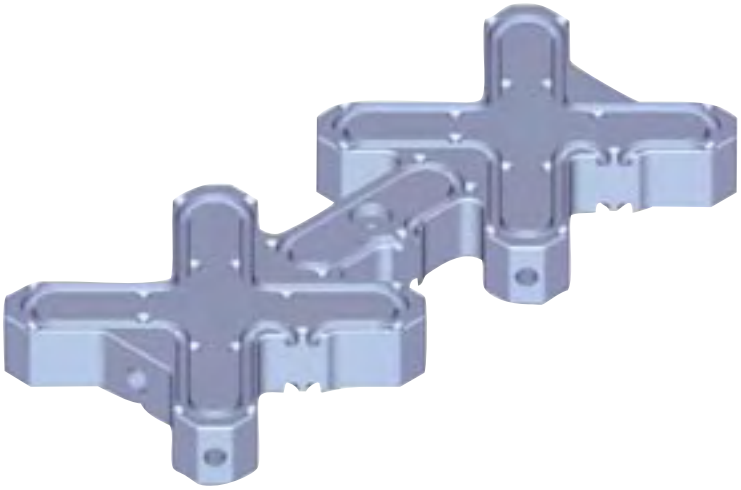

Heatlock Standard Manifold / Heatlock standardbalk X2

Our range of **Standard Manifolds in X2-types**, double X-manifolds, are very comprehensive. They are available in a wide range of lenghts and feed sizes to suite your needs.

Sizes of the cc-dimensions from 60 to 240 mm and feed diameters of 6, 8, 10, 12, 14 and 16 mm are at your choise. The height of the manifolds are 36, 46 or 56 mm, with tolerances within 0,02 mm.

Our manifolds are made of **1.2311/P20/N20**, which is suitable for every common plastic. In regards of further technical qualities we refer to our **QF**-quality standard including our **MI_STD**.

The manifolds are of type ”floated”, centered at the middle with our yellow ceramic, insulated with back supports, also made of ceramic, against the clamping plate. All this is made to keep the heat where it belongs. The ceramic has only 7% of ther conductivity of steel, suitable to insulate between cold and hot components.

For complete location of the manifold, only one additional cylindrical pin is required, which minimize the heat loss. To achieve a even heat within the manifold we use tubular heaters at each side.

All Heatlock Standard Manifolds are delivered to you within 3 weeks. If you need manifolds not included in our standard range we have the possibility to make custom made manifolds, also within 3 weeks.

Vår serie **standardbalkar** i **X2** -utförande, dubbla X-balkar är mycket bred. De finns i en mängd olika storlekar och med olika flytkanalsstorlekar för att passa Ditt behov.

Storlekarna varierar med ett centrumavstånd mellan bussningarna på 60 till 240mm,där Du väljer en flytkanalsstorlek som passar, finns i steg om 6, 8, 10, 12, 14 och 16 mm. Höjden på balkarna för dessa flytkanalsstorlekar ligger på 36, 46 och 56 mm, och håller en tolerans inom 0,02mm.

Balkarna är gjorda i material **1.2311/P20/N20** som väl täcker kravet för att passa de flesta plaster, för övrigt vad gäller den tekniska kvalitén hänvisar vi till vårt **QF** där vår **MI_STD** ingår.

Balkarna är av typen ”flytande”, centrerade i mitten med vår Gula Keramik, isolerade med Bakre stöd mot fästplattan, även dessa naturligtvis gjorda utav Keramik enkom för att behålla värmen där den hör hemma. Keramiken har endast 7 % av stålets värmeledningsförmåga varför det med fördel används för att isolera kalla och varma detaljer från varandra.

Balkarna vridfixeras med hjälp utav en cylindrisk pinne, allt för att minimera värmeöverföring. För att erhålla en jämn värme över hela balken använder vi oss utav runda ipressade element på båda sidor.

Balkarna levereras komplett färdiga inom 3 veckor, och skulle någon av dessa balkar inte passa just ditt projekt, tar vi fram en specialbalk för ditt ändamål även denna inom 3 veckor.

This Heatlock series, below, is currently being replaced by the A1-series of nozzles.
Before you design check availability, stock is gradually decreased.
Spare parts will be available until [illegible] bodies)

Heatlock Standard Manifold

Design of the following sizes:
Utförande i följande storlekar:
MXX060...-MXX100... feed Ø6 - 10

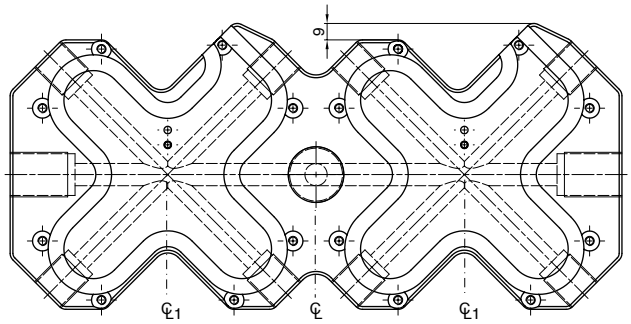

Recommendation
To avoid any leakage, we recommend you to increase the number of bolts, according to the drawing below. The bolts should be placed over the centre of every nozzle, as close as possible to the manifold (leave a space of 15 mm).

Rekommendation
För att förhindra eventuella läckage kan man med fördel placera extra bultar enligt riningen nedan. Dessa bör placeras mitt för bussningarnas respektive centrum, så nära balken som möjligt (lämna 15 mm runt om).

Tightening torque Nm, distribution of applied torque + - 5%. Quality 12.9	
Size	**Torque Nm**
M8	40
M10	79
M12	136
M16	333
M20	649

Explanation of measure abbreviations	
Abb	**Explanation**
c/c X	Distance between drops in x-ledge
c/c Y	Distance between drops in y-ledge
T	Thickness of manifold
Feed	Feed channel
L	Lenght
V	Total Volume of feed channels
W	Wattage
CL	Centre line

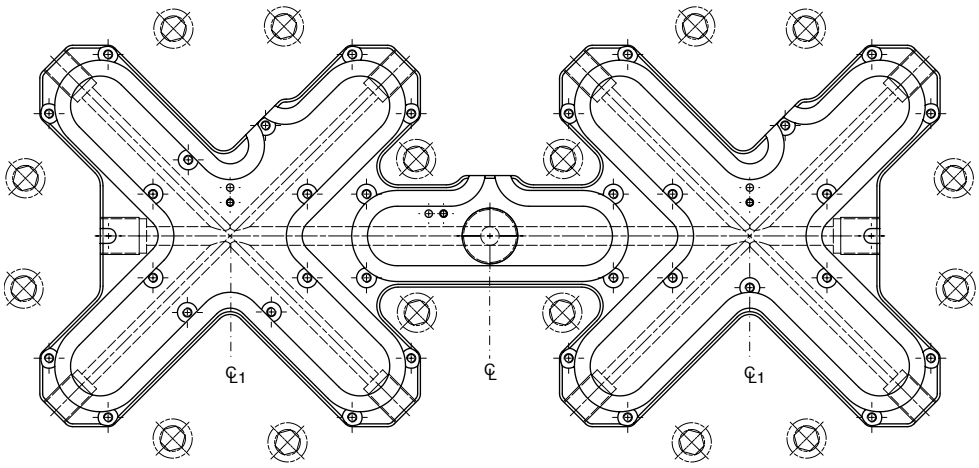

Date: 031002, © LKM Heatlock Co Ltd

This Heatlock series, below, is currently being replaced by the A1-series of nozzles.
Before you design check availability, stock is gradually decreased.
Spare parts will be available until at least end of 2007 (apart form NPT threaded)

Feed 6 Heatlock Standard Manifold

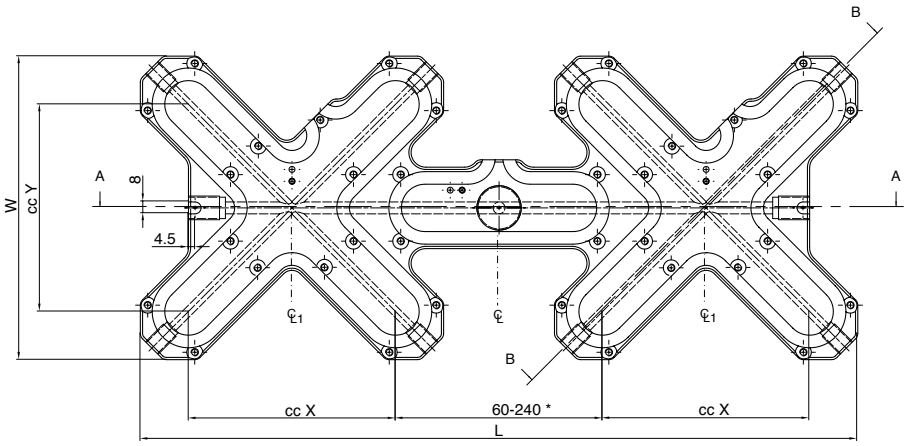

* Dimensions is valid at (c/cX max)
Måttangivelser gäller vid (c/cXmax)

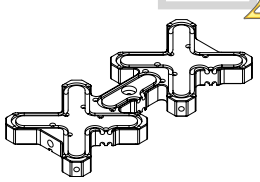

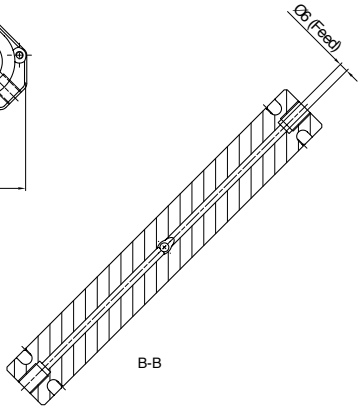

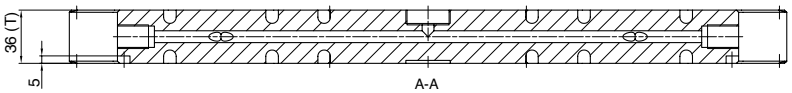

Technical Data / Teknisk data

Our manifolds are made in material 1.2311/P20/N20. The manifolds are all finished to your *exact* specifications using our pre-configured Heatlock standard. Latest news always available at **www.heatlock.com**

Våra balkar är tillverkade i material 1.2311/P20/N20. Balkarna tillverkas efter dina *exakta* önskemål och följer vår Heatlock standard. För ytterligare information, vänligen kontakta oss. Senaste information finner du alltid på **www.heatlock.com**

Part No.	c/c X	c/c Y	T	Feed		L	V (mm³)	W
MXX0600603606	60	60	36	6		260	18714	125
MXX0800803606	80	80	36	6		306	22985	145
MXX1001003606	100	100	36	6		365	27004	165
MXX1201203606	120	120	36	6		425	31274	185
MXX1401403606	140	140	36	6		485	35545	205
MXX1601603606	160	160	36	6		545	42076	225
MXX2002003606	200	200	36	6		665	50617	265
MXX2402403606	240	240	36	6		785	59158	305

Note: cc X and cc Y is max. distances between every drop. Specify your dim's and moulded material, below. We will adjust manifold dim's accordingly. Default moulding temp. 200°C if nothing else noted.
Obs: cc X och cc Y anger max. avstånd mellan varje drop. Ange önskade mått och material som skall sprutas. Vi justerar balkens mått enligt dess temp. Om ingen temp. anges använder vi 200°C som standard.

Customer Notes / Noteringar av kund

Manifold Part No. | temp. °C / Mat. | /

☐ Inserts
☐ Plugs

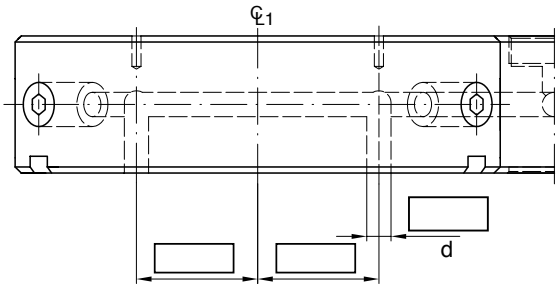

When ordering, fill in dimensions and fax your local distributor.
Vid beställning, fyll i mått och faxa in din beställning till oss.

Company	
Name	
Address	
Phone	
Fax	
E-mail	

This Heatlock series, below, is currently being replaced by the A1-series of nozzles.
Before you design check availability, stock is gradually decreased.
Spare parts will be available until the end of year 2025 and beyond UPON REQUEST.

Feed 8 Heatlock Standard Manifold

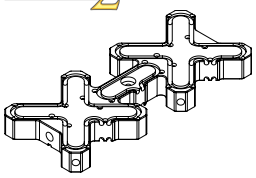

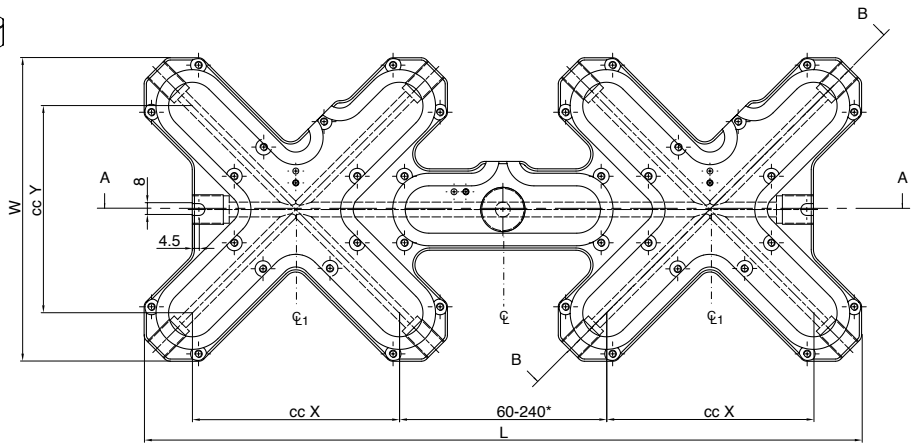

* Dimensions is valid at (c/cX max)
Måttangivelser gäller vid (c/cXmax)

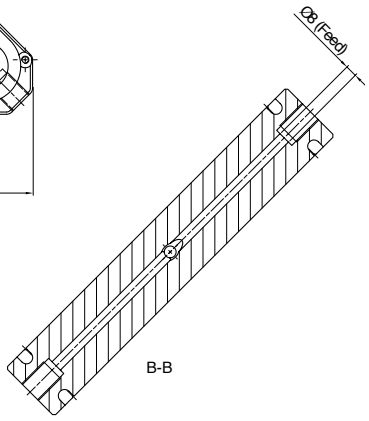

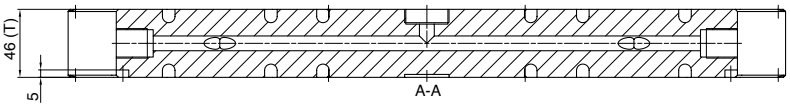

Technical Data / Teknisk data

Our manifolds are made in material 1.2311/P20/N20. The manifolds are all finished to your *exact* specifications using our pre-configured Heatlock standard. Latest news always available at **www.heatlock.com**

Våra balkar är tillverkade i material 1.2311/P20/N20. Balkarna tillverkas efter dina *exakta* önskemål och följer vår Heatlock standard. För ytterligare information, vänligen kontakta oss. Senaste information finner du alltid på **www.heatlock.com**

Part No.	c/c X	c/c Y	T	Feed		L	V (mm³)	W
MXX0600604608	60	60	46	8		260	33525	125
MXX0800804608	80	80	46	8		306	40684	145
MXX1001004608	100	100	46	8		365	47451	165
MXX1201204608	120	120	46	8		425	54610	185
MXX1401404608	140	140	46	8		485	61770	205
MXX1601604608	160	160	46	8		545	72948	225
MXX2002004608	200	200	46	8		665	87266	265
MXX2402404608	240	240	46	8		785	101585	305

Note: cc X and cc Y is max. distances between every drop. Specify your dim's and moulded material, below. We will adjust manifold dim's accordingly. Default moulding temp. 200°C if nothing else noted.

Obs: cc X och cc Y anger max. avstånd mellan varje drop. Ange önskade mått och material som skall sprutas. Vi justerar balkens mått enligt dess temp. Om ingen temp. anges använder vi 200°C som standard.

Customer Notes / Noteringar av kund

Manifold Part No. _____ temp. °C / Mat. / ☐ Inserts ☐ Plugs

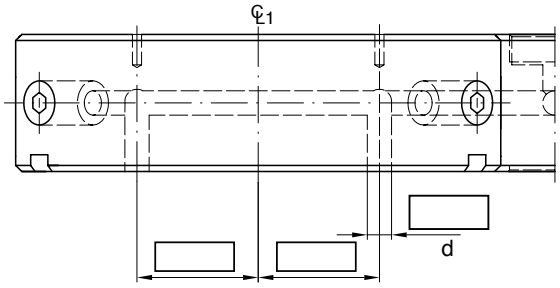

When ordering, fill in dimensions and fax your local distributor.
Vid beställning, fyll i mått och faxa in din beställning till oss.

Company	
Name	
Address	
Phone	
Fax	
E-mail	

Date: 031002, © LKM Heatlock Co Ltd

This Heatlock series, below, is currently being replaced by the A1-series of nozzles.
Before you design check availability, stock is gradually decreased.
Spare parts will be available until at least end of 2007 (apart form NPT1 bodies)

Feed 10 Heatlock Standard Manifold

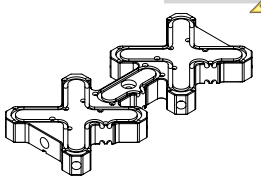

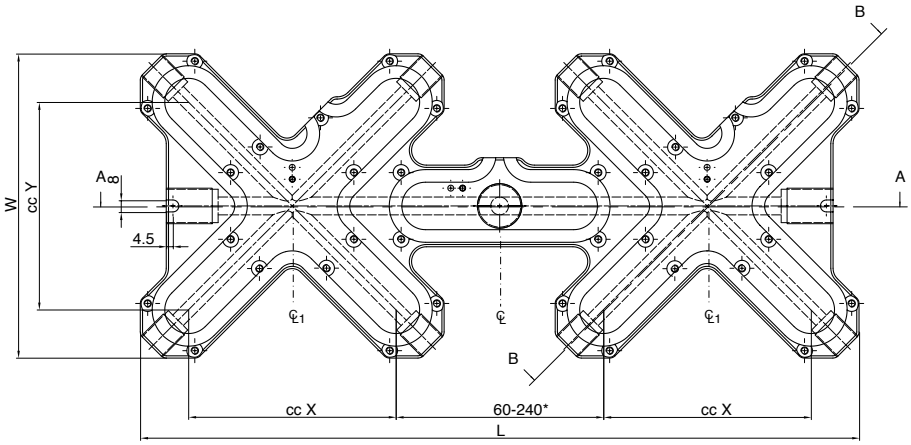

* Dimensions is valid at (c/cX max)
Måttangivelser gäller vid (c/cXmax)

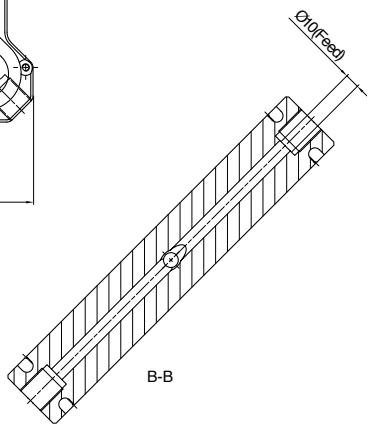

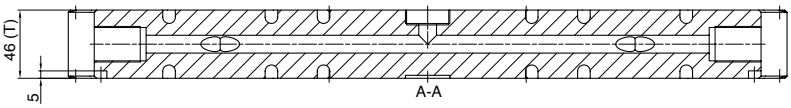

Technical Data / Teknisk data

Our manifolds are made in material 1.2311/P20/N20. The manifolds are all finished to your *exact* specifications using our pre-configured Heatlock standard. Latest news always available at **www.heatlock.com**

Våra balkar är tillverkade i material 1.2311/P20/N20. Balkarna tillverkas efter dina *exakta* önskemål och följer vår Heatlock standard. För ytterligare information, vänligen kontakta oss. Senaste information finner du alltid på **www.heatlock.com**

Part No.	c/c X	c/c Y	T	Feed		L	V (mm³)	W
MXX0600604610	60	60	46	10		290	50549	125
MXX0800804610	80	80	46	10		330	61349	145
MXX1001004610	100	100	46	10		370	71584	165
MXX1201204610	120	120	46	10		425	82384	185
MXX1401404610	140	140	46	10		485	93184	205
MXX1601604610	160	160	46	10		545	110264	225
MXX2002004610	200	200	46	10		665	131864	265
MXX2402404610	240	240	46	10		785	153464	305

Note: cc X and cc Y is max. distances between every drop. Specify your dim's and moulded material, below. We will adjust manifold dim's accordingly. Default moulding temp. 200°C if nothing else noted.
Obs: cc X och cc Y anger max. avstånd mellan varje drop. Ange önskade mått och material som skall sprutas. Vi justerar balkens mått enligt dess temp. Om ingen temp. anges använder vi 200°C som standard.

Customer Notes / Noteringar av kund

Manifold Part No. _____ temp. °C / Mat. / ☐ Inserts ☐ Plugs

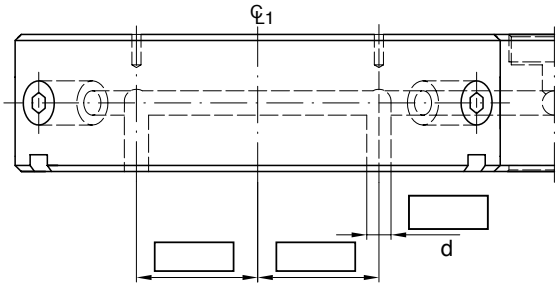

When ordering, fill in dimensions and fax your local distributor.
Vid beställning, fyll i mått och faxa in din beställning till oss.

Company	
Name	
Address	
Phone	
Fax	
E-mail	

This Heatlock series, below, is currently being replaced by the A1-series of nozzles.
Before you design, check availability, stock is gradually decreased.
Spare parts will be available until at least end of 2007 (apart form NPT1 bodies)

Feed 12 Heatlock Standard Manifold

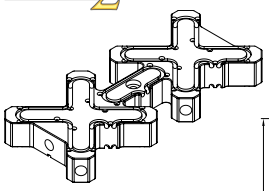

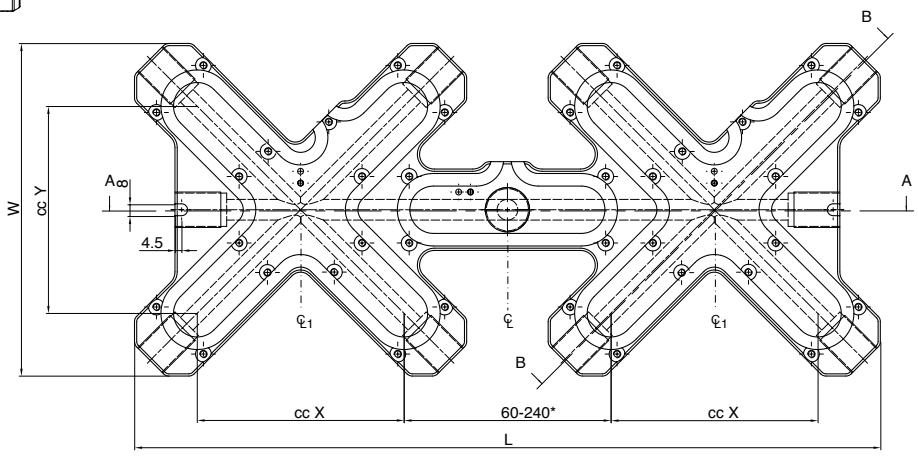

* Dimensions is valid at (c/cX max)
Måttangivelser gäller vid (c/cXmax)

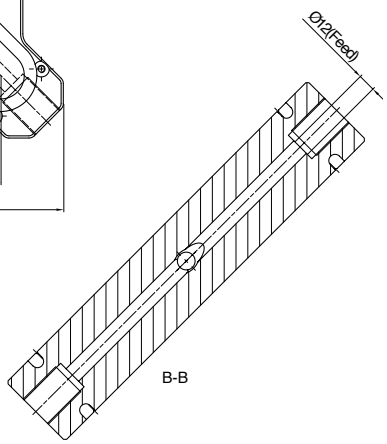

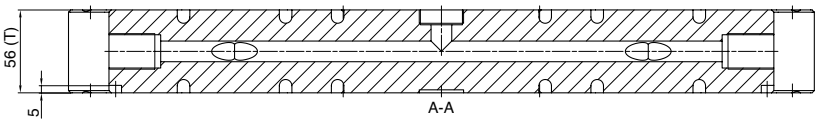

Technical Data / Teknisk data

Our manifolds are made in material 1.2311/P20/N20. The manifolds are all finished to your *exact* specifications using our pre-configured Heatlock standard. Latest news always available at **www.heatlock.com**

Våra balkar är tillverkade i material 1.2311/P20/N20. Balkarna tillverkas efter dina *exakta* önskemål och följer vår Heatlock standard. För ytterligare information, vänligen kontakta oss. Senaste information finner du alltid på **www.heatlock.com**

Part No.	c/c X	c/c Y	T	Feed		L	V (mm³)	W
MXX1201205612	120	120	56	12		445	120157	205
MXX1401405612	140	140	56	12		505	135360	225
MXX1601605612	160	160	56	12		565	159607	245
MXX2002005612	200	200	56	12		685	190013	285
MXX2402405612	240	240	56	12		805	220419	325

Note: cc X and cc Y is max. distances between every drop. Specify your dim's and moulded material, below. We will adjust manifold dim's accordingly. Default moulding temp. 200°C if nothing else noted.

Obs: cc X och cc Y anger max. avstånd mellan varje drop. Ange önskade mått och material som skall sprutas. Vi justerar balkens mått enligt dess temp. Om ingen temp. anges använder vi 200°C som standard.

Customer Notes / Noteringar av kund

Manifold Part No. _____ temp. °C / Mat. / ☐ Inserts ☐ Plugs

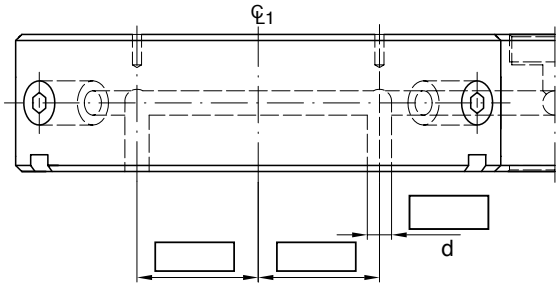

When ordering, fill in dimensions and fax your local distributor.
Vid beställning, fyll i mått och faxa in din beställning till oss.

Company	
Name	
Address	
Phone	
Fax	
E-mail	

Date: 031002, © LKM Heatlock Co Ltd

This Heatlock series, below, is currently being replaced by the A1-series of nozzles.
Before you design check availability, stock is gradually decreased.
Spare parts will be available until at least end of 2007 (apart form NPTY bodies)

Feed 14 Heatlock Standard Manifold

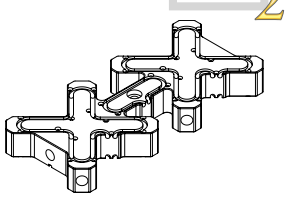

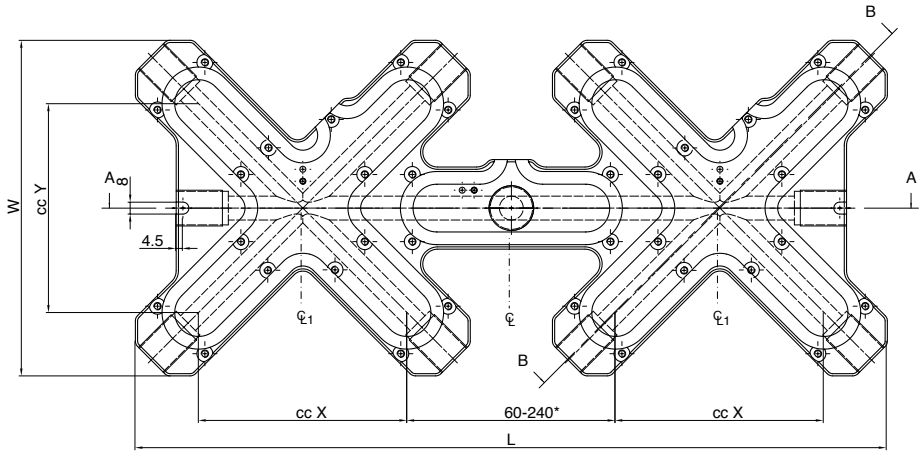

* Dimensions is valid at (c/cX max)
Måttangivelser gäller vid (c/cXmax)

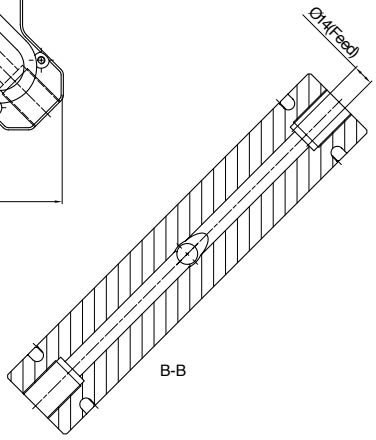

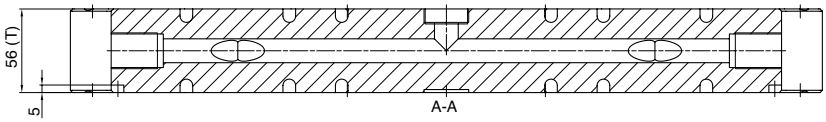

Technical Data / Teknisk data

Our manifolds are made in material 1.2311/P20/N20. The manifolds are all finished to your *exact* specifications using our pre-configured Heatlock standard. Latest news always available at **www.heatlock.com**

Våra balkar är tillverkade i material 1.2311/P20/N20. Balkarna tillverkas efter dina *exakta* önskemål och följer vår Heatlock standard. För ytterligare information, vänligen kontakta oss. Senaste information finner du alltid på **www.heatlock.com**

Part No.	c/c X	c/c Y	T	Feed		L	V (mm³)	W
MXX1201205614	120	120	56	14		445	160250	205
MXX1401405614	140	140	56	14		505	180598	225
MXX1601605614	160	160	56	14		565	213256	245
MXX2002005614	200	200	56	14		685	253954	285
MXX2402405614	240	240	56	14		805	294651	325

Note: cc X and cc Y is max. distances between every drop. Specify your dim's and moulded material, below. We will adjust manifold dim's accordingly. Default moulding temp. 200°C if nothing else noted.

Obs: cc X och cc Y anger max. avstånd mellan varje drop. Ange önskade mått och material som skall sprutas. Vi justerar balkens mått enligt dess temp. Om ingen temp. anges använder vi 200°C som standard.

Customer Notes / Noteringar av kund

Manifold Part No. _____ temp. °C / Mat. / ☐ Inserts ☐ Plugs

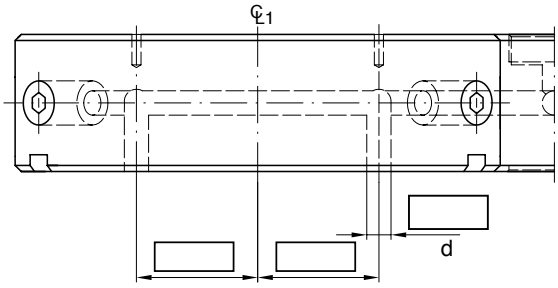

When ordering, fill in dimensions and fax your local distributor.
Vid beställning, fyll i mått och faxa in din beställning till oss.

Company	
Name	
Address	
Phone	
Fax	
E-mail	

This Heatlock series, below, is currently being replaced by the A1-series of nozzles.
Before you design check availability, stock is gradually decreased.
Spare parts will be available for a few years. [illegible]

Feed 16 Heatlock Standard Manifold

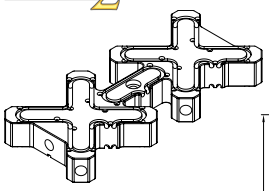

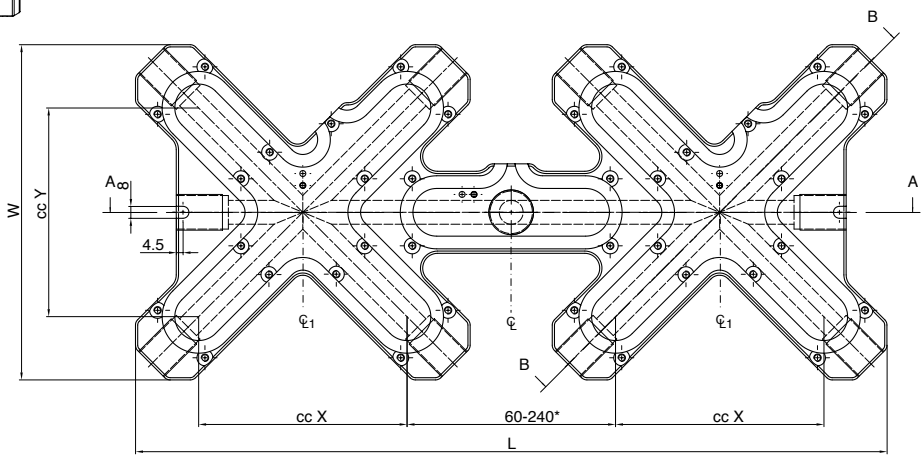

* Dimensions is valid at (c/cX max)
Måttangivelser gäller vid (c/cXmax)

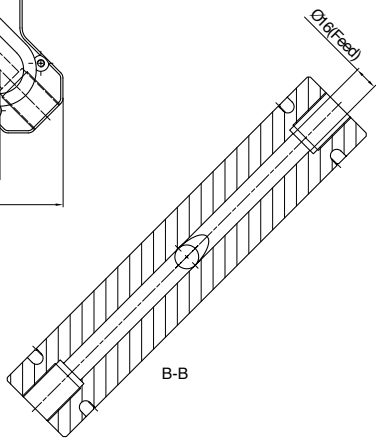

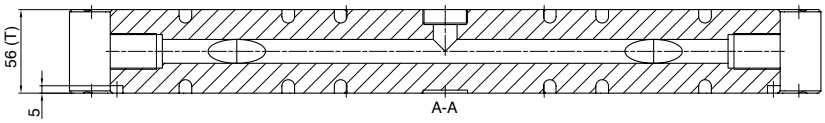

Technical Data / Teknisk data

Our manifolds are made in material 1.2311/P20/N20. The manifolds are all finished to your *exact* specifications using our pre-configured Heatlock standard. Latest news always available at **www.heatlock.com**

Våra balkar är tillverkade i material 1.2311/P20/N20. Balkarna tillverkas efter dina *exakta* önskemål och följer vår Heatlock standard. För ytterligare information, vänligen kontakta oss. Senaste information finner du alltid på **www.heatlock.com**

Part No.	c/c X	c/c Y	T	Feed		L	V (mm³)	W
MXX1201205616	120	120	56	16		445	192931	205
MXX1401405616	140	140	56	16		505	217048	225
MXX1601605616	160	160	56	16		565	257241	245
MXX2002005616	200	200	56	16		685	305475	285
MXX2402405616	240	240	56	16		805	353708	325

Note: cc X and cc Y is max. distances between every drop. Specify your dim's and moulded material, below. We will adjust manifold dim's accordingly. Default moulding temp. 200°C if nothing else noted.

Obs: cc X och cc Y anger max. avstånd mellan varje drop. Ange önskade mått och material som skall sprutas. Vi justerar balkens mått enligt dess temp. Om ingen temp. anges använder vi 200°C som standard.

Customer Notes / Noteringar av kund

Manifold Part No. _____ temp. °C / Mat. / ☐ Inserts ☐ Plugs

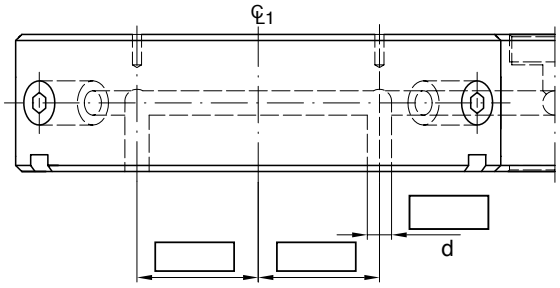

When ordering, fill in dimensions and fax your local distributor.
Vid beställning, fyll i mått och faxa in din beställning till oss.

Company	
Name	
Address	
Phone	
Fax	
E-mail	

Date: 031002, © LKM Heatlock Co Ltd

This Heatlock series, below, is currently being replaced by the A1-series of nozzles.
Before you design check availability, stock is gradually decreased.
Spare parts will be available until at least end of 2007 (apart form NPT1 bodies)

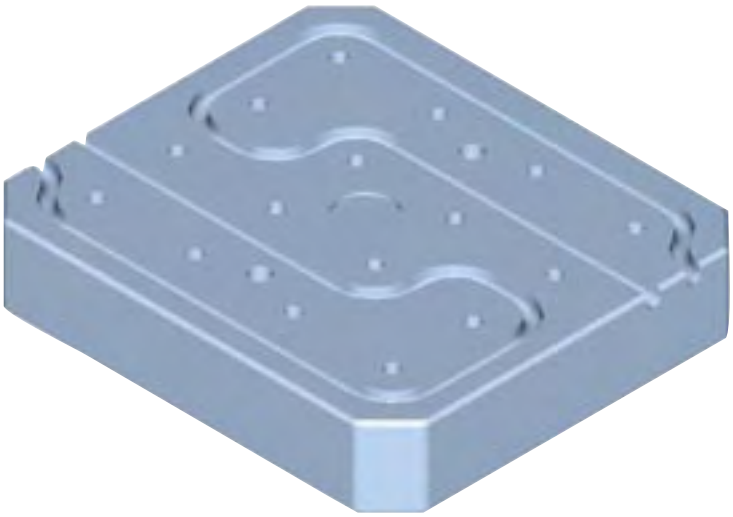

Heatlock Custom Manifold / Heatlock kundanpassad balk

Our manifolds are made of **1.2311/P20/N20**, which is suitable for every common plastic. In regards of further technical qualities we refer to our **QF**-quality standard including our **MI_STD**.

The manifolds are of type ”floated”, centered at the middle with our yellow ceramic, insulated with back supports, also made of ceramic, against the clamping plate. All this is made to keep the heat where it belongs. The ceramic has only 7% of the conductivity of steel, suitable to insulate between cold and hot components.

For complete location of the manifold, only one additional cylindrical pin is required, which minimize the heat loss. To achieve a even heat within the manifold we use tubular heaters, one at each side.

All Heatlock Custom Manifolds are delivered to you within 3 weeks. If you need manifolds not included in our standard range we have the possibility to make custom made manifolds, also within 3 weeks.

Balkarna är gjorda i material **1.2311/P20/N20** som väl täcker kravet för att passa de flesta plaster, för övrigt vad gäller den tekniska kvalitén hänvisar vi till vårt **QF** där vår **MI_STD** ingår.

Balkarna är av typen ” flytande ”, centrerade i mitten med vår Gula Keramik, isolerade med Bakre stöd mot fästplattan, även dessa naturligtvis gjorda utav Keramik enkom för att behålla värmen där den hör hemma. Keramiken har endast 7 % av stålets värmeledningsförmåga varför det med fördel används för att isolera kalla och varma detaljer från varandra.

Balkarna vridfixeras med hjälp utav en cylindrisk pinne, allt för att minimera värmeöverföring. För att erhålla en jämn värme över hela balken använder vi oss utav runda ipressade element, ett på var sida.

Balkarna levereras komplett färdiga inom 3 veckor, och skulle någon av dessa balkar inte passa just ditt projekt, tar vi fram en specialbalk för ditt ändamål även denna inom 3 veckor.

This Heatlock series, below, is currently being replaced by the A1-series of nozzles.
Before you design check availability, stock is gradually decreased.
Spare parts will be available until at least end of 2007 (apart form NPT1 bodies)

Heatlock Custom Manifold

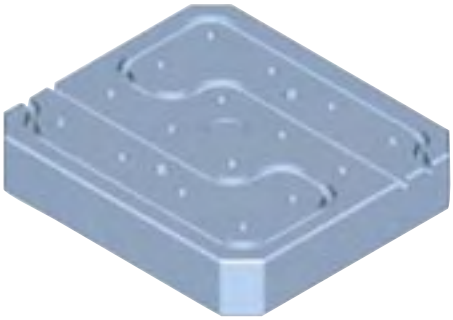

Custom Manifold
If not any of our standard manifolds suit your need, we can easily make one according to your specifications. With our design of standard manifolds its very easy for us to modify existing design to your need. Actually custom made or standard made is really the same word for us today.

To make it simple, both for you as a customer and for us, all you have to do is to specify the sheets on those pages and send it to us. You can use fax or email. This information is the foundation to our common design work, that we will proceed with.

Kundanpassad Varmkanalbalk.
Om inte någon utav våra standardbalkar skulle passa ditt behov tar vi lika enkelt fram en för dig specifik balk för just Ditt projekt. Med vår standardisering på hur en varmkanalsbalk skall göras, allt ifrån borrning utav flytkanaler till pluggning ja till det den yttre form som balken skall ha, elimineras ordet standard för oss, standard-balk eller kundanpassad balk är för oss detsamma.

För att underlätta det både för Dig som kund och för oss, fyller du endast i ett par enkla frågor på följande sidor, som Du faxar eller mailar oss. Dessa bildar grunden för vår gemensamma diskussion och fortsamma arbete i Ditt nya projekt.

Give us Your specifications
Ge oss Dina specifikationer

1. Moulding material / Material som formsprutas: .....
2. Mould temp. / Verktygstemp. ..... °C
2. Shot weight / Skottvikt:: .....
3. Gate type / Intagstyp: ☐ cold runner / kallkanal ☐ direct gating / direktintag
4. Number of cavities / Antal formrum: .....
5. Diameter of manifold flow channel / Diameter balkens flytkanal: .....
6. Diameter down to drop / Diameter ned till bussning: .....

7. Type of nozzle mark your type					
	ESB	1	2	3	4
	PPB	1	2	3	
	NPT	1	2		
	TOP	2			

8. Other information / Övrig information

Company: .....

Name: .....

Adress: .....

City: .....

Country: .....

Phone: .....

Fax: .....

E-mail: .....

Date: 031002, © LKM Heatlock Co Ltd

This Heatlock series, below, is currently being replaced by the A1-series of nozzles.
Before you design check availability, stock is gradually decreased.
Spare parts will be available until at least end of 2007 (apart form NPT1 bodies)

Heatlock Custom Manifold

Place your desired design / Placera ut dina intagspunkter

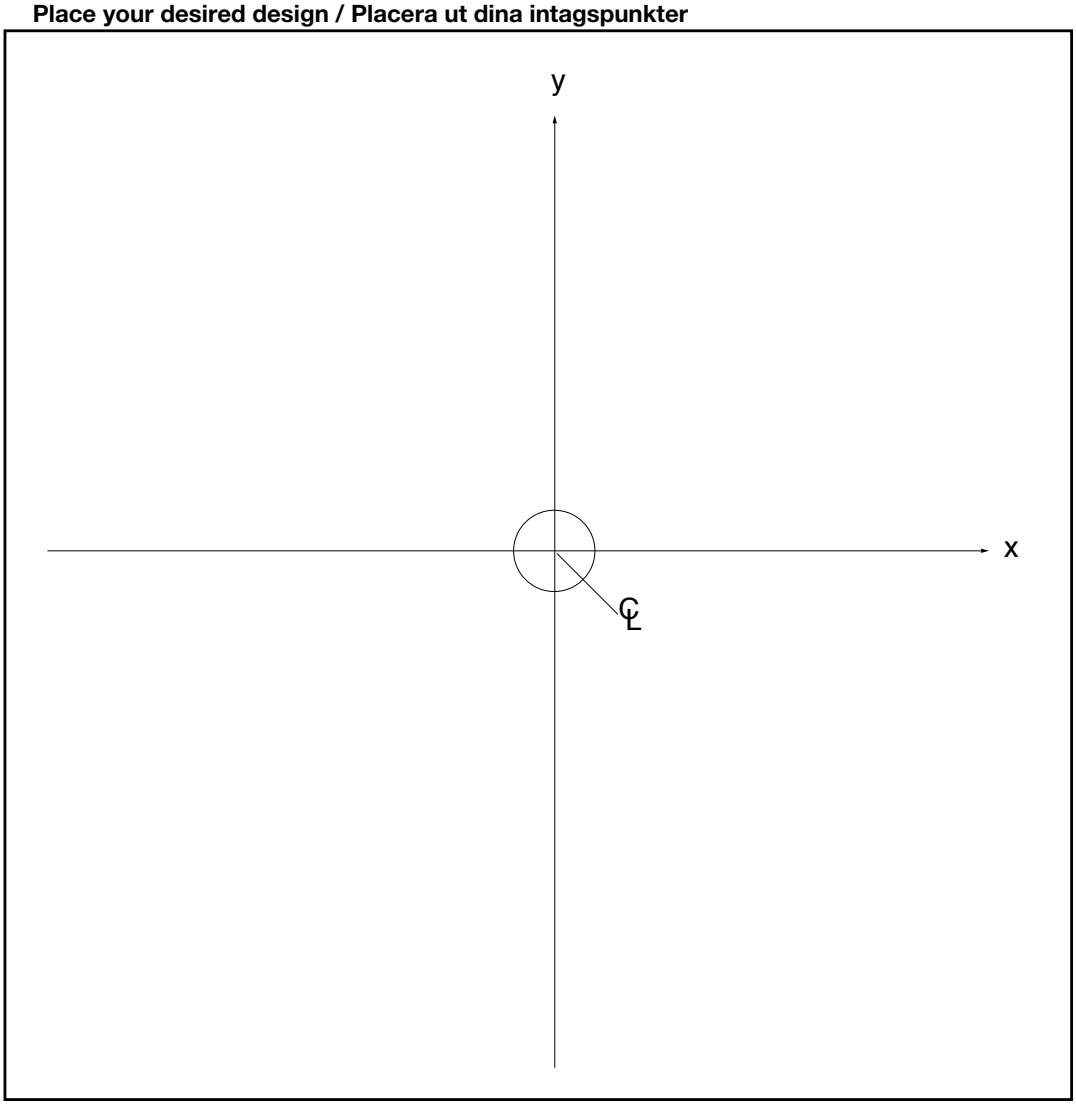

drop	x	y
1		
2		
3		
4		
5		
6		
7		
8		
9		
10		
11		
12		
13		
14		
15		
16		

Example / exempel

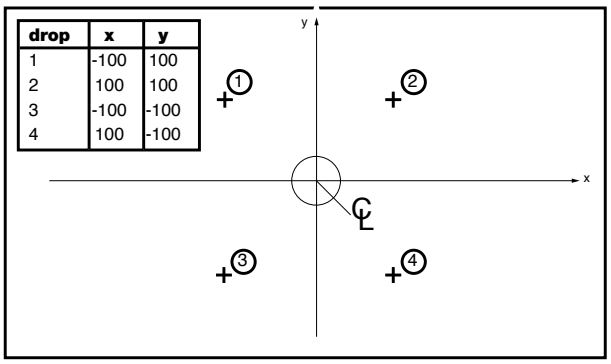

This Heatlock series, below, is currently being replaced by the A1-series of nozzles.
Before you design check availability, stock is gradually decreased.
Spare parts will be available until at least end of 2007 (apply from NPT1 bodies)

Heatlock Custom Manifold Example

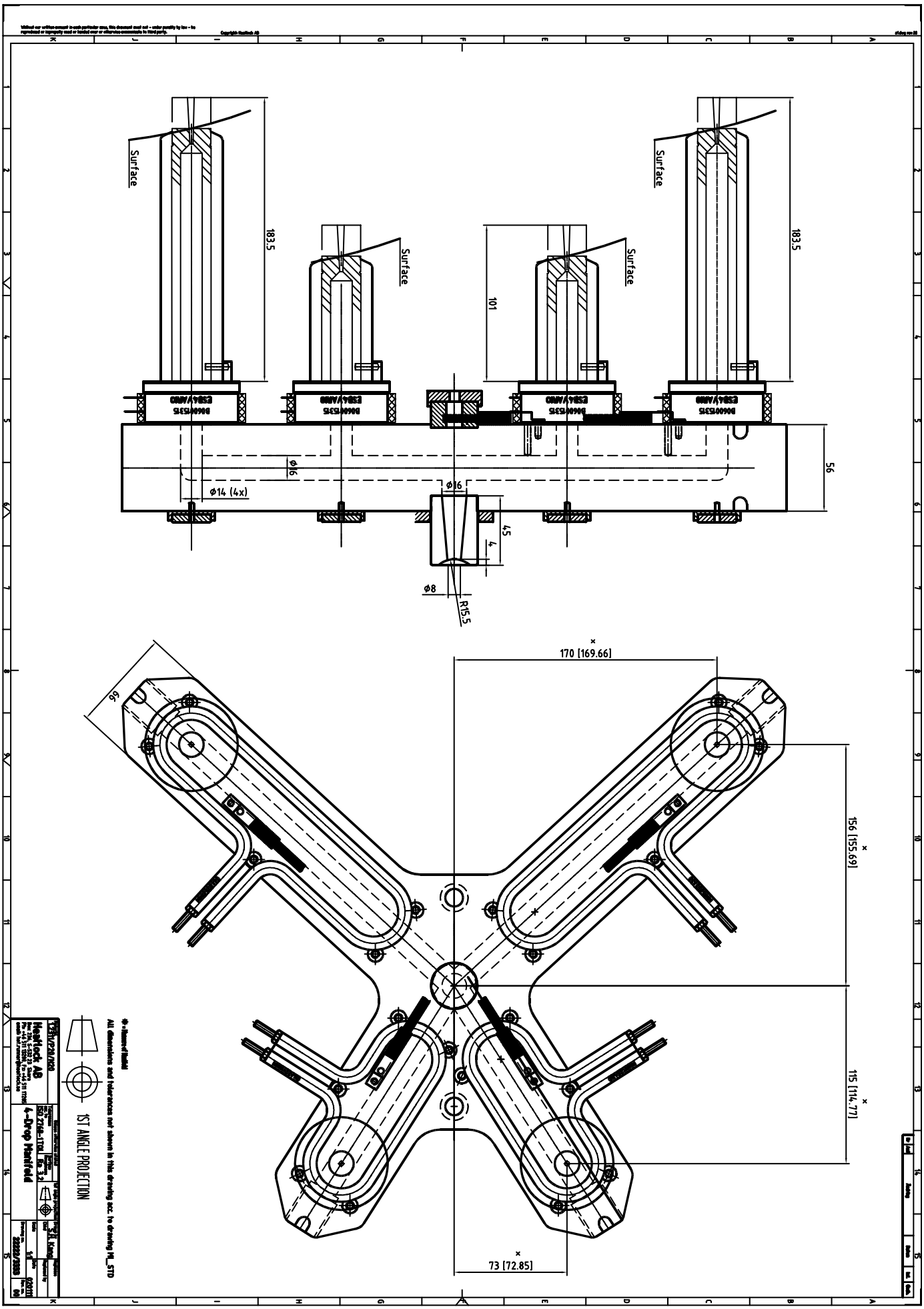

Date: 031002, © LKM Heatlock Co Ltd

This Heatlock series, below, is currently being replaced by the A1-series of nozzles.
Before you design check availability, stock is gradually decreased.
Spare parts will be available until at least end of 2007 (apart form NPT1 bodies)

Heatlock Custom Manifold Example

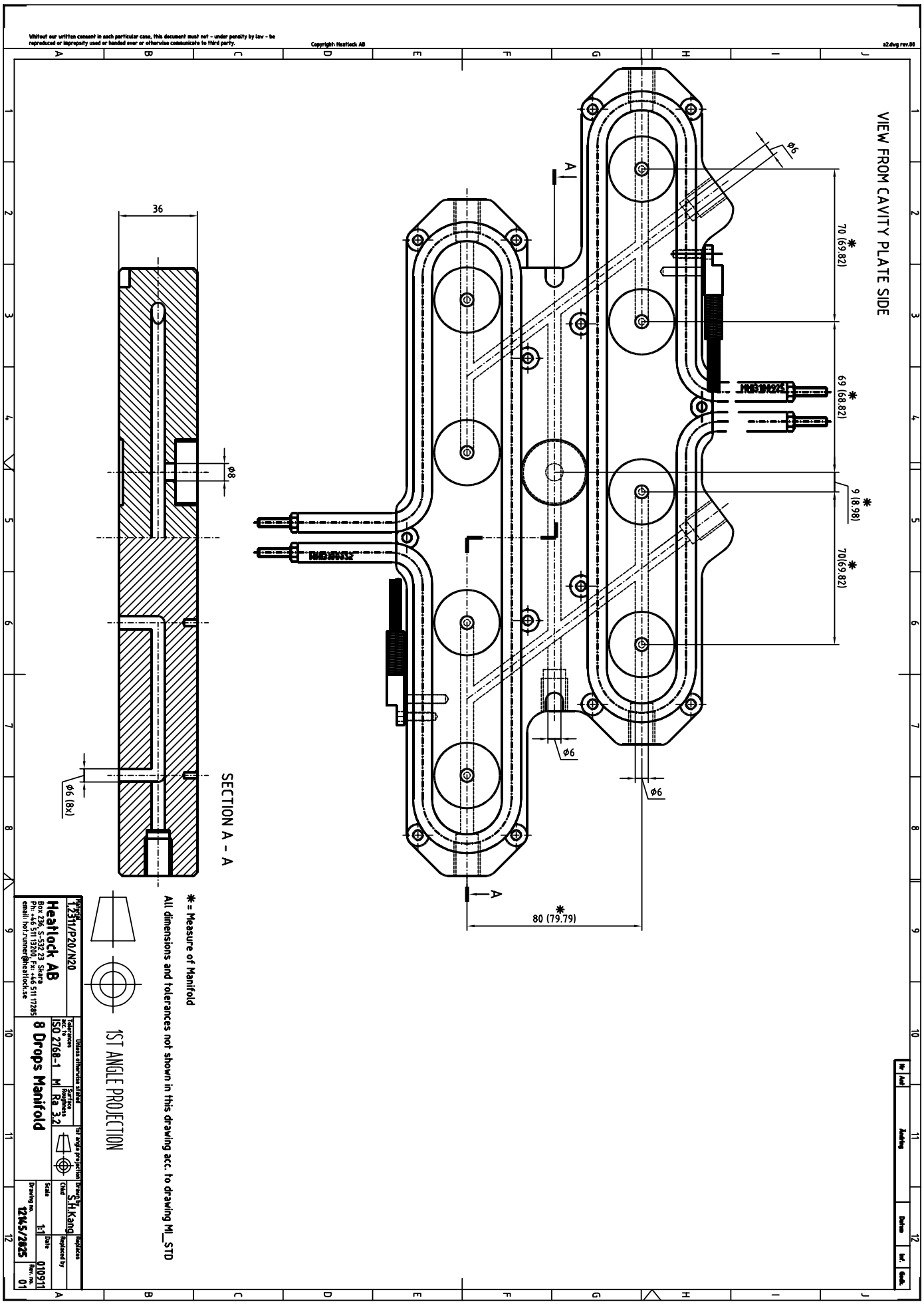

This Heatlock series, below, is currently being replaced by the A1-series of nozzles.
Before you design check availability, stock is gradually decreased.
Spare parts will be available until at least end of 2007 (apart form NPT1 bodies)

Date: 031002, © LKM Heatlock Co Ltd

This Heatlock series, below, is currently being replaced by the A1-series of nozzles.
Before you design check availability, stock is gradually decreased.
Spare parts will be available until at least end of 2007 (apart form NPT1 bodies)

MANIFOLD COMPONENTS

Ceramics • Tubular Heaters • Ancillaries

HEATLOCK®

This Heatlock series, below, is currently being replaced by the A1-series of nozzles.
Before you design check availability, stock is gradually decreased.
Spare parts will be available until at least end of 2007 (except from MPT1 bodies)

Heatlock Standard Accessories / Tillbehör

Feedbush
munstycksbussning
DSP4503008

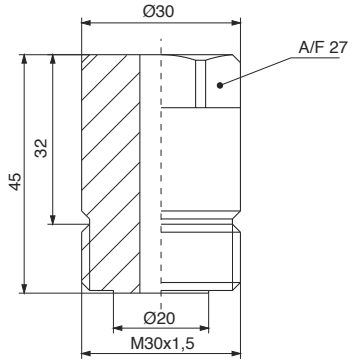

DSP-Vario

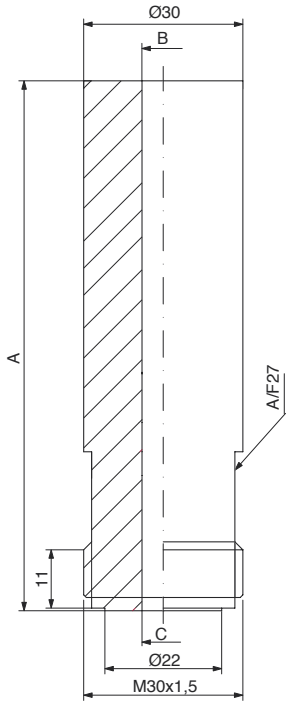

A=(35-100)mm
B=(8-18)mm
C=(8-18)mm

Bandheater with thermocouple
Bandelement med termogivare
B030018100

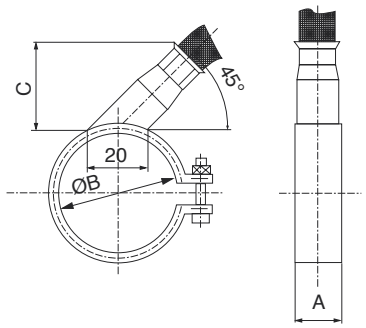

Part No.	Dimension	Wattage	A	B	C
B030018100	30x17 mm	180W	17	30	25

Boring instruction for B030018100
inbyggnadsanvisning för B030018100

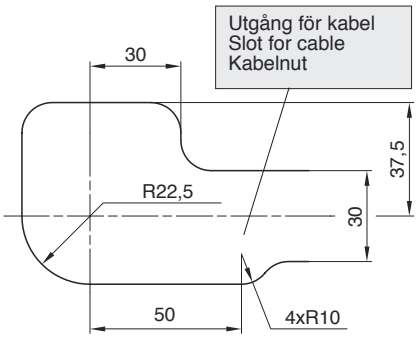

Purge Guard
Läckageskydd
DSPP503105 H=5 mm
DSPP503107 H=7 mm
DSPP803107 H=7 mm

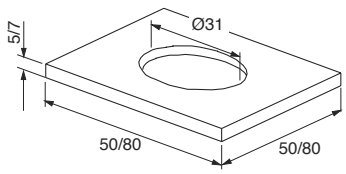

Ceramic centre spacer
Centerring
KEM03001017

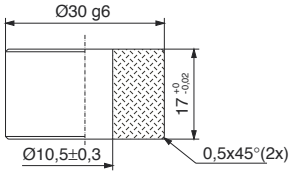

Centre location spacer
Centreringshylsa
DSP0353010

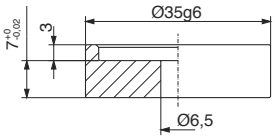

Ceramic back support
Bakre stöd
KE02500305

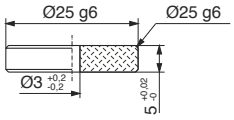

Backspacer
Centrerring bakre
DSP0300306
DSP0300312

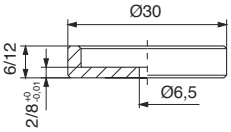

Ceramic bottom spacer
Undre distans
KE02001015 A=15 mm
KE02001020 A=20 mm

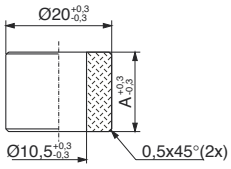

Date: 031113, © LKM Heatlock Co Ltd

Tubular Heater / Element – MHI

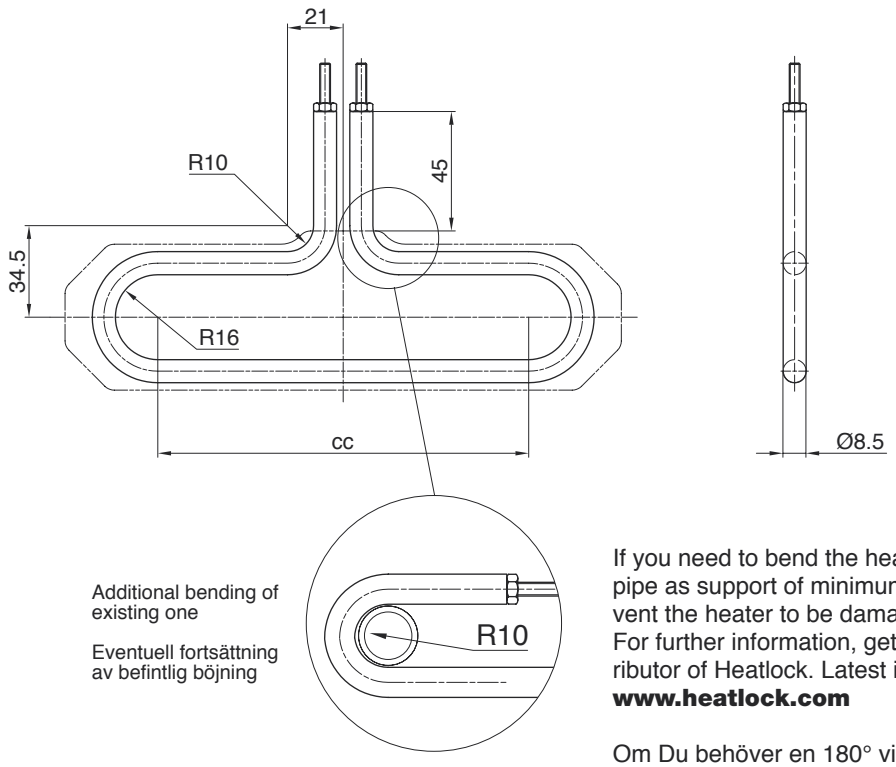

If you need to bend the heater 180°, make sure to use a pipe as support of minimum radius 10 mm. This will prevent the heater to be damaged.
For further information, get in contact with your local distributor of Heatlock. Latest information always available at **www.heatlock.com**

Om Du behöver en 180° vinkel, se till att använda ett rör med min. radie 10 mm för att inte riskera att knäcka elementet.
För ytterligare information, vänligen kontakta oss. Senaste information finner du alltid på **www.heatlock.com**

Part No.	cc	L	Watt
MHI0600400	60	336	400
MHI0800480	80	365	480
MHI1000540	100	405	540
MHI1200600	120	445	600
MHI1400660	140	485	660
MHI1600720	160	525	720
MHI2000805	200	607	805
MHI2400925	240	687	925
MHI2801045	280	767	1045

Tubular Heater / Element – MHX

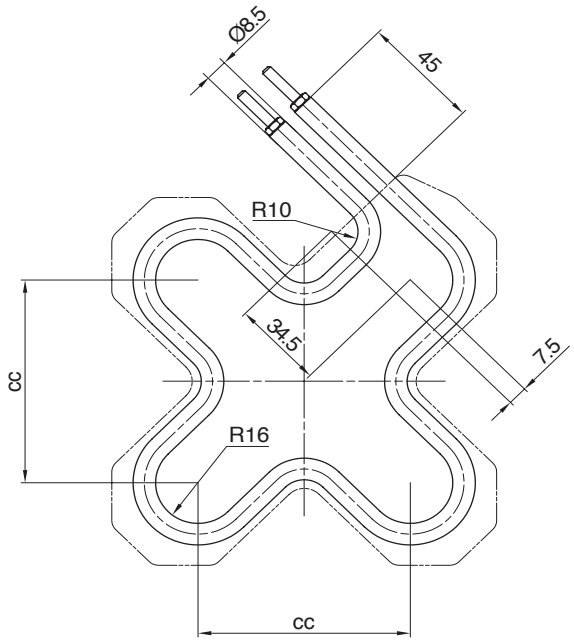

For manifolds upp to cc ≤ 100 mm
För balkar upp till cc ≤ 100 mm

Part No.	cc	L	Watt
MHX0600660	60	511	660
MHX0800830	80	624	830
MHX1001000	100	737	1000
MHX1201140	120	835	1140
MHX1401310	140	948	1310
MHX1601480	160	1062	1480
MHX2001820	200	1288	1820
MHX2401820	240	1514	1820

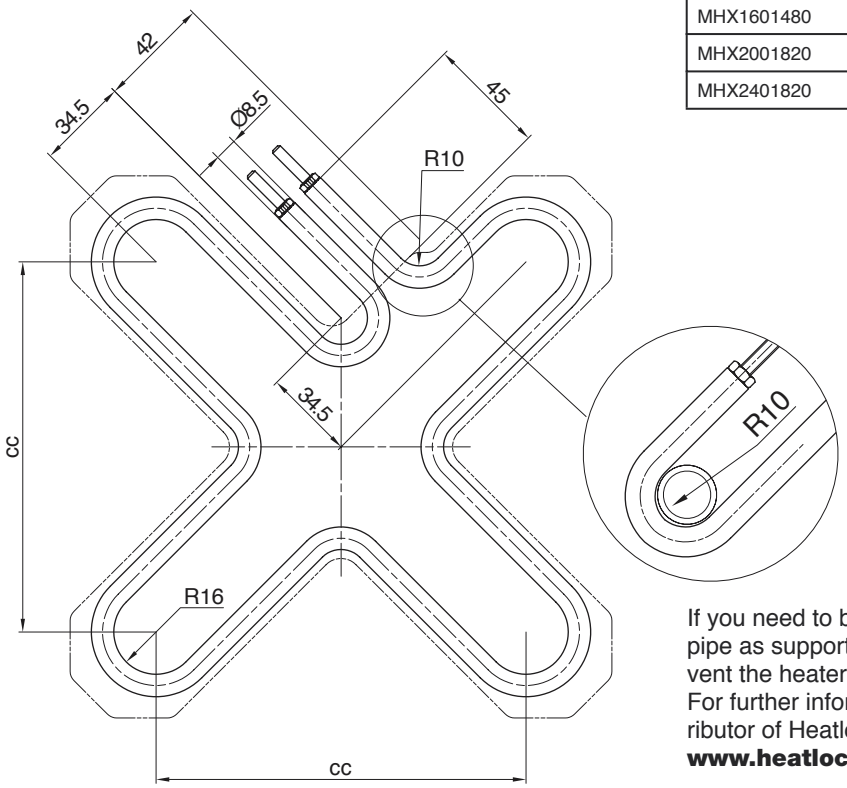

Additional bending of existing one

Eventuell fortsättning av befintlig böjning

For manifolds upp to cc ≤ 240 mm
För balkar upp till cc ≤ 240 mm

If you need to bend the heater 180°, make sure to use a pipe as support of minimum radius 10 mm. This will prevent the heater to be damaged.
For further information, get in contact with your local distributor of Heatlock. Latest information always available at **www.heatlock.com**

Om Du behöver en 180° vinkel, se till att använda ett rör med min. radie 10 mm för att inte riskera att knäcka elementet.
För ytterligare information, vänligen kontakta oss. Senaste information finner du alltid på **www.heatlock.com**

Date: 031113, © LKM Heatlock Co Ltd

This Heatlock series, below, is currently being replaced by the A1-series of nozzles.
Before you design check availability, stock is gradually decreased.
Spare parts will be available until at least end of 2007 (apart form NPT1 bushes)

Straight Tubular Heater / Rakt element – RH

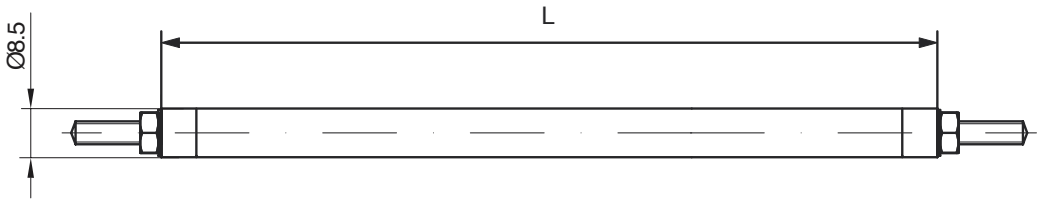

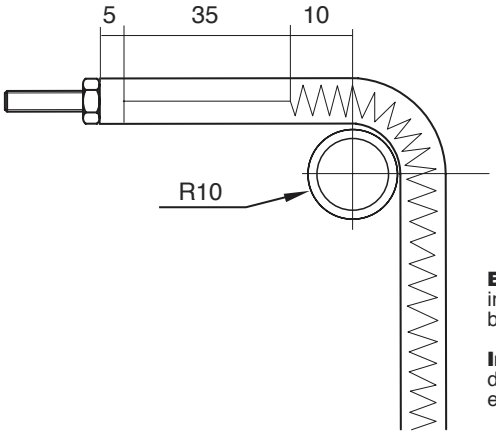

Bending Instruction: The tube cladding must not be damaged by impact from hammers or damaged by scars. Once a tubular heater has been bent, it must not be bent back on the same spot.

Instruktion för böjning: Den skyddande ytan på elementet får inte skadas genom hammarslag eller behandlas så att sprickbildning uppstår. När elementet en gång böjts får det inte böjas tillbaka på samma punkt.

Part No.	L	Watt
RH8503360400	336	400
RH8503650480	365	480
RH8504050540	405	540
RH8504450600	445	600
RH8504850660	485	660
RH8504950660	495	660
RH8505110660	511	660
RH8505250720	525	720
RH8506070805	607	805
RH8506060830	606	830
RH8506240830	624	830
RH8506870925	687	925
RH8507211000	721	1000
RH8507371000	737	1000
RH8507671045	767	1045
RH8508121140	812	1140
RH8508351140	835	1140
RH8509261310	926	1310
RH8509481310	948	1310
RH8510451480	1045	1480
RH8510621480	1062	1480
RH8512681820	1268	1820
RH8512881820	1288	1820
RH8514871820	1487	1820
RH8515141820	1514	1820

This Heatlock series, below, is currently being replaced by the A1-series of nozzles.
Before you design check availability, stock is gradually decreased.
Spare parts will be available until at least end of 2007 (except form NPT1 bodies)

Cable

IXHX2

Item	Qty	Description	Standard
1	1	Cable clip	Ø 4mm
2	1	Cable	1,5mm²

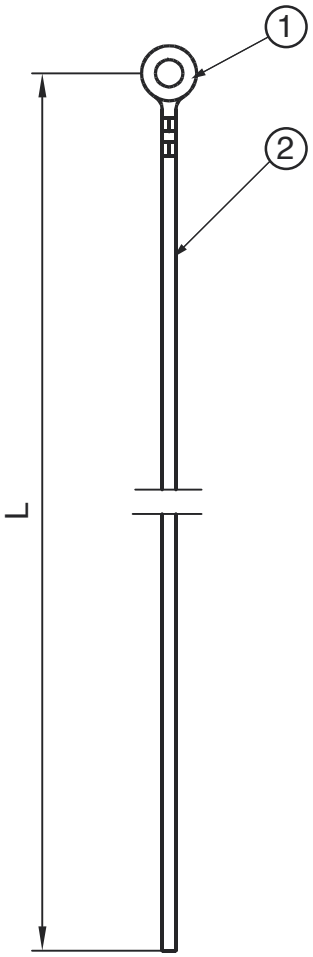

Part No.	L
MHWIRE050	500
MHWIRE100	1000
MHWIRE200	2000
MHWIRE300	3000

Cable for tubular heater used in manifolds.

Kabel för anslutning till element i varmkanalbalkar.

Ceramic connector / Keramisk kopplingsplint

IXHX2

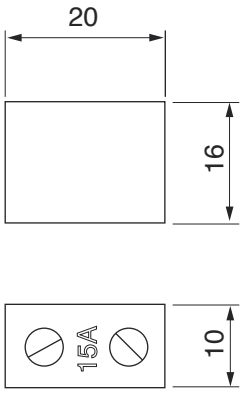

Art. Nr.	Ampere
MHCONN001	15

HEATLOCK®

Date: 031113, © LKM Heatlock Co Ltd

Thermocouples / Termoelement

Themocouples for accurate measuring of temperature in moulds for injection moulding. All thermocouples are of J–Type and have grounded junctions.
Lead wires are protected by a rugged stainless steel braided cover. Length of cables 900 mm.

Connect:
Black (Red) to the positive pole (+)
White (Black)to the negative pole (–)

Termoelement för exakt mätning av temperaturen i plasformar. Samtliga termoelement är av J-typ (FeCuNi) och isolerade.
Ytterhölje av flätad rostfri tråd.
Kabellängd 900 mm

Koppla:
Svart (röd) till pluspol (+)
Vit (svart) till minuspol (–)

Used between bandheaters and sprue bush or in applications where space will not permit any round type of thermocouple. Measures temperatures up to 400°C. The blade is made of copper and can be contoured to various shapes.

För instickning under t. ex. ringelement. Mäter temperaturer upp till 400°C. Plattan är gjord av koppar och kan formas till önskad form.

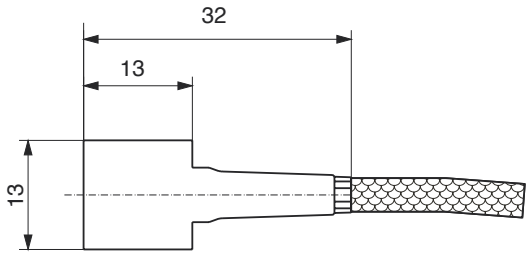

Art. nr	TC00240000

Used to measure temperatures on i.e. manifolds. Measures the temperature in the tip of the tube. (400°C)
Drill the hole for the thermocouple 1 mm shorter than the L–measurment to ensure good contact at the measuring point.

För mätning av temperaturen på t. ex. varmkanalplattor. Mätpunkten ligger längst fram i spetsen. Gör hålet för givaren 1 mm kortare än L-måttet så att givaren säkert ligger i botten på hålet.

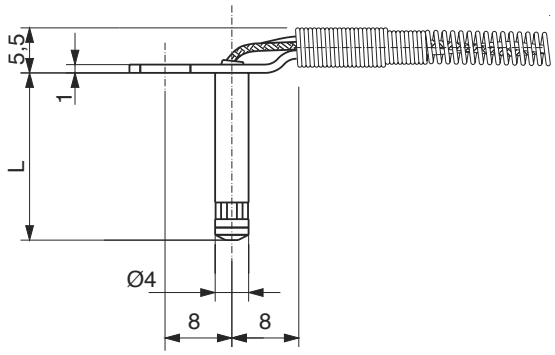

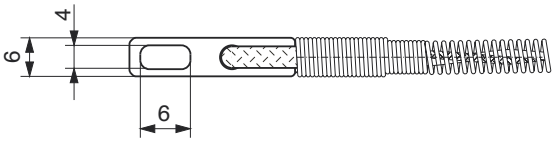

Art. nr	L
TC00040180	12
TC00040185	20

This Heatlock series, below, is currently being replaced by the A1-series of nozzles.
Before you design check availability, stock is gradually decreased.
Spare parts will be available until at least end of 2007 (applicable for NPT1 bodies)

Seal / Bricka – MS

IXHX2

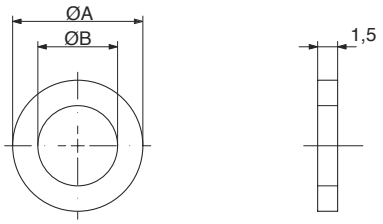

Notice:
Those parts are included in all complete manifolds.

Observera:
Varje balk levereras med dessa komponenter.

Part No.	A	B
MS06	10	6
MS08	14	8
MS10	18	10
MS12	22	12
MS14	22	14
MS16	22	16
MS18	22	18

Plug / Plugg – MP

IXHX2

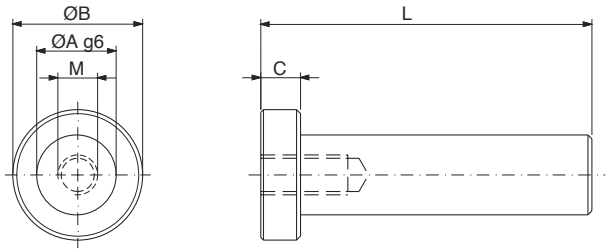

Notice:
Those parts are included in all complete manifolds.

Observera:
Varje balk levereras med dessa komponenter.

Part No.	A	B	C	M	L
MP06080	6	10	3	M3	80
MP08080	8	14	3	M4	80
MP10080	10	17	3	M5	80
MP12080	12	22	5	M6	80
MP14080	14	22	5	M6	80
MP16080	16	22	5	M6	80
MP18080	18	22	5	M6	80

Dowell / Stift - DW

IXHX2

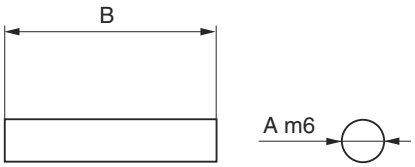

Notice:
Those parts are included in all complete manifolds.

Observera:
Varje balk levereras med dessa komponenter.

Part No.	A	B
DW03X12	3	12
DW08X40	8	40

Date: 031113, © LKM Heatlock Co Ltd

This Heatlock series, below, is currently being replaced by the A1-series of nozzles.
Before you design check availability, stock is gradually decreased.
Spare parts will be available until at least end of 2007 (apart form MPT1 series)

Heatlock Plugs and connectors IXHX2

Insatser hane / Insert male, pin		
Part No.	**förklaring**	**description**
MASKINHA06	Stiftinsats 6-polig	Insert male, 6-pin
MASKINHA10	Stiftinsats 10-polig	Insert male, 10-pin
MASKINHA16	Stiftinsats 16-polig	Insert male, 16-pin
MASKINHA24	Stiftinsats 24-polig	Insert male, 24-pin

Insatser hona / Insert female		
Part No.	**förklaring**	**description**
MASKINHO06	Hylsinsats 6-polig	Insert female, 6-pin
MASKINHO10	Hylsinsats 10-polig	Insert female, 10-pin
MASKINHO16	Hylsinsats 16-polig	Insert female, 16-pin
MASKINHO24	Hylsinsats 24-polig	Insert female, 24-pin

Kapsling med fläns (kabelintag underifrån) / Housing mould, flange		
Part No.	**förklaring**	**description**
MASKKAFL06	Kapsling, fläns 6-polig	Housing mould, flange 6-pin
MASKKAFL10	Kapsling, fläns 10-polig	Housing mould, flange 10-pin
MASKKAFL16	Kapsling, fläns 16-polig	Housing mould, flange 16-pin
MASKKAFL24	Kapsling, fläns 24-polig	Housing mould, flange 24-pin

Kapsling med sidintag / Housing mould, side exit		
Part No.	**förklaring**	**description**
MASKKASD06	Kapsling sidintag 6-polig	Housing mould, side exit 6-pin
MASKKASD10	Kapsling sidintag 10-polig	Housing mould, side exit 10-pin
MASKKASD16	Kapsling sidintag 16-polig	Housing mould, side exit 16-pin
MASKKASD24	Kapsling sidintag 24-polig	Housing mould, side exit 24-pin

Kapsling för montering på kabel: (Kabelintag på sidan) / Hood loom, side exit		
Part No.	**förklaring**	**description**
MASKKAKS06	Kapsling, kabel sid. 6-polig	Hood loom, side exit 6-pin
MASKKAKS10	Kapsling, kabel sid.10-polig	Hood loom, side exit 10-pin
MASKKAKS16	Kapsling, kabel sid.16-polig	Hood loom, side exit 16-pin
MASKKAKS24	Kapsling, kabel sid. 24-polig	Hood loom, side exit 24-pin

Kapsling för montering på kabel: (Kabelintag på toppen) / Hood loom, top exit		
Part No.	**förklaring**	**description**
MASKKAKT06	Kapsling kabel topp. 6-polig	Hood loom, top exit 6-pin
MASKKAKT10	Kapsling kabel topp10-polig	Hood loom, top exit 10-pin
MASKKAKT16	Kapsling kabel topp16-polig	Hood loom, top exit 16-pin
MASKKAKT24	Kapsling, kabel topp 24-polig	Hood loom, top exit 24-pin

Håltagning / boring	a	b	under / below: c	sida / side: c	d	e
6–polig	52	70	32	40	35	M4
10–polig	65	83	32	40	35	M4
16–polig	86	102	32	45	35	M4
24–polig	112	130.0	32	45	35	M4

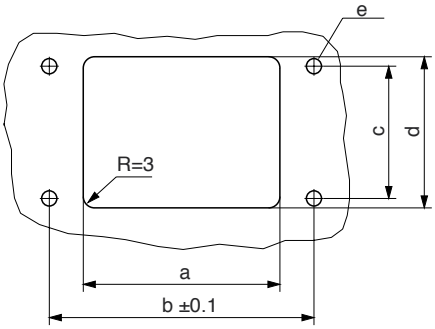

This Heatlock series, below, is currently being replaced by the A1-series of nozzles.
Before you design check availability, stock is gradually decreased.
Spare parts will be available until at least end of 2007 (apart form NPT1 bodies)

Date: 031113, © LKM Heatlock Co Ltd

This Heatlock series, below, is currently being replaced by the A1-series of nozzles.
Before you design check availability, stock is gradually decreased.
Spare parts will be available until at least end of 2007 (apart form NPT1 bodies)

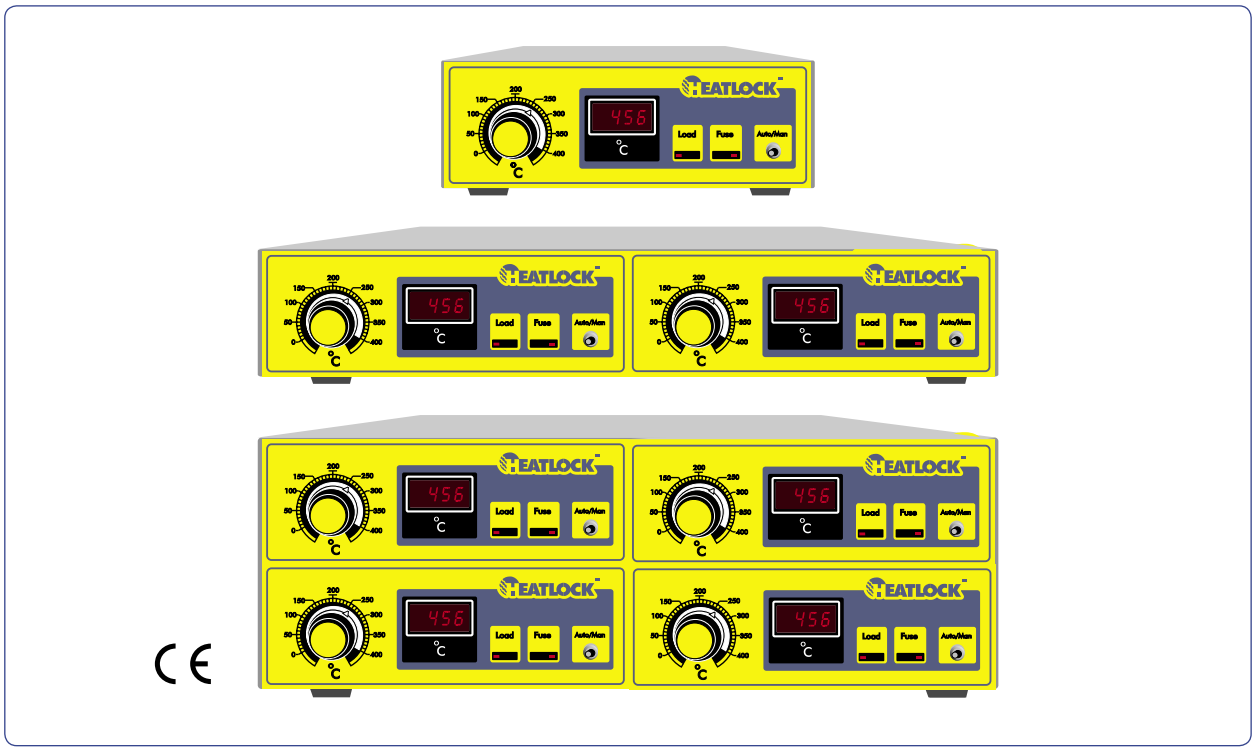

HLDC - Digital Controllers

Heatlock Digital Controllers comprise:

HLDC-1/06	one zone 6 amps, including loom & loom connector.
HLDC-2/10	two zones 10 amps, including loom & loom connector.
HLDC-4/10	four zones 10 amps, including loom & loom connector.

General

The HLDC is a precision microprocessor controller with many advanced features such as:

- load recognising self tuning.
- soft start heater protection and error messages.

The control program is more advanced than conventional PID systems and offers the speed of response and super accuracy, today required by demanding thermoplastic materials and cycle times.

In Use

For closed loop operation just select "Auto" with the switch and dial in the set temperature. When the dial is moved the 4 digit display shows the new set point selection and after a few seconds reverts back to the actual temperature reading. For open loop operation (when there is a faulty or no thermocouple) select "Man" with the switch and dial in the percentage power setting. The display will show the setting accurately.

Faults

In addition to the two LEDs for fuse (indicates the power output fuse has blown) and load (flashes are directly related to % power output), the display will also indicate the following faults:
-ERR!=reversed t/c.
-TC!=open circuit thermocouple.
The fuse is located in the rear panel.

The control program

The super accurate and self tuning control program is shared with the most sophisticated systems designed by a World leader in hot runner control. On start up the power is increased gradually to dry out the heater. The program then runs a "load test" and self tunes so that probe, nozzle or manifold zones are controlled at the correct speed. The program then makes constant adjustments to achieve set points; just like a heat seeking missile chasing a moving target. The result is that set point is reached safely and quickly with negligible overshoot. Response to cyclic changes is exeptional and straight line control is achievable even on difficult applications.

This Heatlock series, below, is currently being replaced by the A1-series of nozzles.
Before you design check availability, stock is gradually decreased.
Spare parts will be available until at least end of 2007 (apart form NPT1 bodies)

HRS Controller Fuses				
Model	Item no.	Output Fuse	Item no.	Supply Fuse
HLDC				
1 zone 6A	HLDCOP063FF	6.3A FF 20mm	HLDCIP063QF	6.3A Quick Blow 20 mm
2 zone 6A	HLDCOP063FF	6.3A FF 20mm	HLDCIP120QF	12A Quick Blow 1.25"
4 zone 6A	HLDCOP063FF	6.3A FF 20mm	HLDCIP160QF	16A Quick Blow 1.25"
2 zone 10A	HLDCOP100FF	10A FF 1.25"	HLDCIP120QF	12A Quick Blow 1.25"
4 zone 10A	HLDCOP100FF	10A FF 1.25"	HLDCIP160QF	16A Quick Blow 1.25"

Dimensions	Length	Diameter
20mm	20mm	5mm
1.25"	1.25"	0.25"

CONNECTORS	
MASKINHA06	male
MASKINHO06	female
MASKKAFL06	housing
MASKKAKT06	hood
MASKINHA10	male
MASKINHO10	female
MASKKAFL10	housing
MASKKAKT10	hood
MASKINHA16	male
MASKINHO16	female
MASKKAFL16	housing
MASKKAKT16	hood

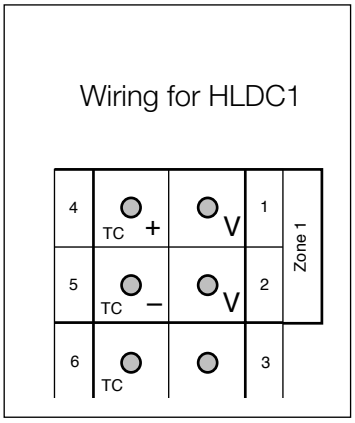

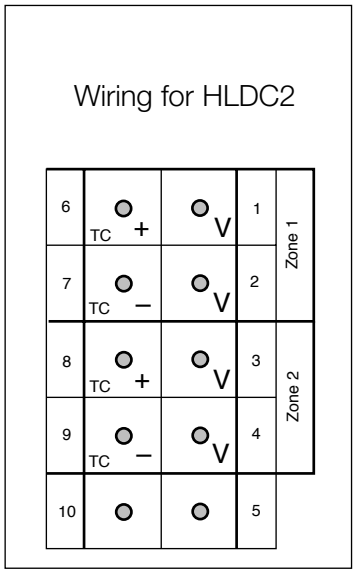

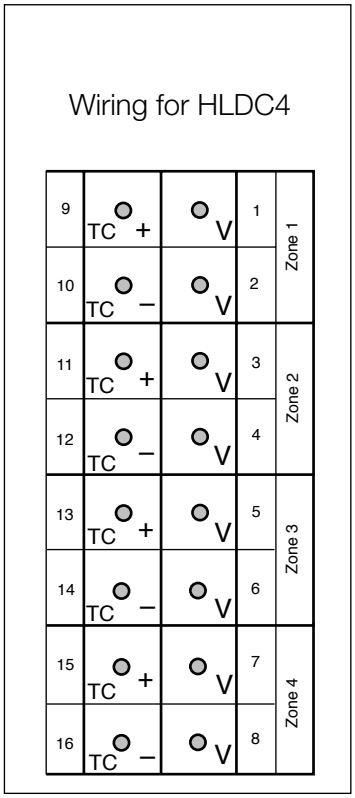

HLDC1

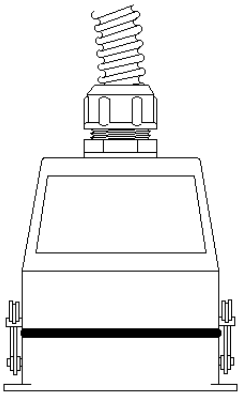

screwhole Ø4.4

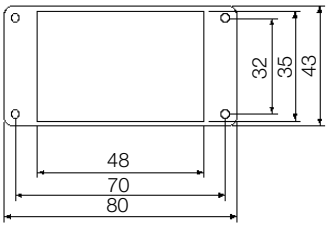

HLDC2

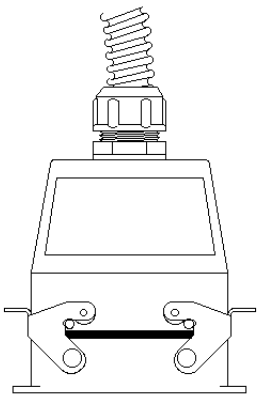

screwhole Ø4.4

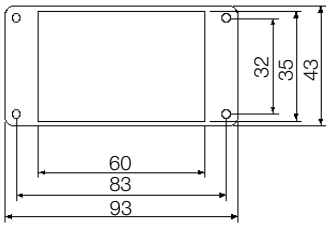

HLDC4

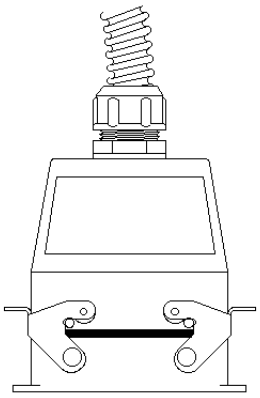

screwhole Ø4.4

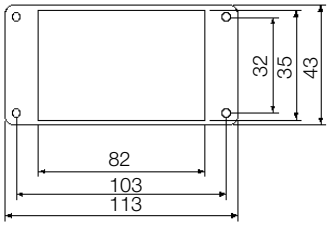

Date: 031002, © LKM Heatlock Co Ltd

This Heatlock series, below, is currently being replaced by the A1 series of nozzles.
Before you design these available stock is gradually decreased.
Spare parts will be available until at least end of 2007 (apart form NPT1 bodies)

HLDC User Guide

General Description

The HLDC can have 1, 2, or 4 control zones.

The front of the HLDC has a control panel which consists of a display, control knob, mode switch, and 2 LED indicators for each zone.

Display-	This is a `star burst`4 character display. This will display one of the following: 1) Actual temperature of the zone (in Auto mode). 2) Set temperature (when in Auto mode and the control knob is moved). 3) Percentage power (in Manual mode). 4) An error message (see Error list).
Control knob-	This is used to set the required temperature in auto mode or percentage power in manual mode.
Load LED-	This LED is lit when power is supplied to the zone.
Fuse LED-	This LED is lit if the controller detects a blown fuse.
Mode switch-	This is used to select the mode of the zone. To the left selects Auto (closed loop) control. To the right selects Manual (open loop) control.

Error Messages

When in Auto (closed loop) mode, instead of the actual temperature a flashing error message may be displayed.

T/C	The thermocouple has been detected as open circuit.
ERR!	No temperature rise. Thermocouple reversed, thermocouple pinched, faulty heater or faulty wiring.

Specifications

The following are general specifications. The actual controller supplied may differ in specified options.

Supply Voltage:	208v - 240v single phase 50/60 Hz.
Supply Amps:	13 amps total. (7 amps on HLDC-1).
Voltage Output:	Burst fired, zero crossover.
Control Method:	Open or closed loop.
Triac rating:	15 amps at 240v AC.
Zone rating:	Maximum of 6 amps per zone (total not to exceed 13 amps).
Overload protection:	High speed semiconductor fuse links.
T/C input:	Iron Constantine FE/Con type `J`.
Control range:	0 - 400 Centigrade (Celcius).
Scale:	Centigrade (Celsius).
Display:	4 character `star burst`.
Case:	Metal case, size dependent on cofiguration.

Auto - Closed Loop Control

Select Auto on the Mode selection switch (switch in the left position).
Use the control knob to the required temperature. While the knob is being turned the display will show an arrow and the set temperature.

Man - Open Loop Control

Select Man on the Mode selection switch (switch in the right position).
Use the control knob to set the required percentage power

Notices:

These controllers are designed primarily for use within the plastic injection moulding industry and should not for any other purpose without fist consulting a senior engineer from Heatlock.

The controller should be used in dry environment only.

The controller must not be used in an explosive atmosphere.

When in use this device does not emit noise in excess of 10dB(A).

Refer to the serial plate attached to the controller for confirmation of supply requirements etc.

Warning!

Always re-fit High Rupture Current load fuses in the event of fuse rupture. Failure to do so will cause damage to the cotroller on subsequent fuse failures.

This guide is intended for use with the HLDC range of controllers. The actual model designation depends on the number of zones wired. E.g. A HLDC with 4 zones wired would have a model designation of HLDC-4.

Date: 031002, © LKM Heatlock Co Ltd

This Heatlock series, below, is currently being replaced by the A1-series of nozzles.
Before you design check availability, stock is gradually decreased.
Spare parts will be available until at least end of 2007 (apart form NPT1 bodies)

Filter Nozzle

A filter nozzle helps by removing metal shavings and impurities in the plastic material. In this way you avoid blockages in your hot runner system which could force a production stop for cleaning.

Moreover the plastic material is mixed better before it is injected into the form, which helps you to keep an even and high quality in the production.
By using the filter nozzle you will save both time and money.

- M1 has a toothed surface on the filter which gives it very good mixing properties.

- M2 is the simplest to clean since it has a smooth surface on the filter.

- M3, which is provided with a needle point, is capable of limiting the build up of threading. In the use of a pin-point intake nozzle together with, for example crystal-line plastic this is very desirable.

All models are produced in SKD-61 and are also TIN-treated.
The body is made in a number of standard forms and can also be ordered in a special design.

M1

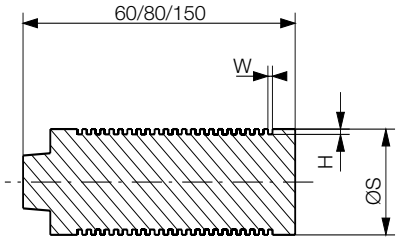

M2

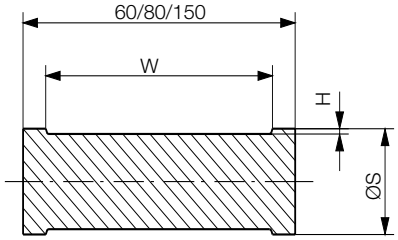

M3

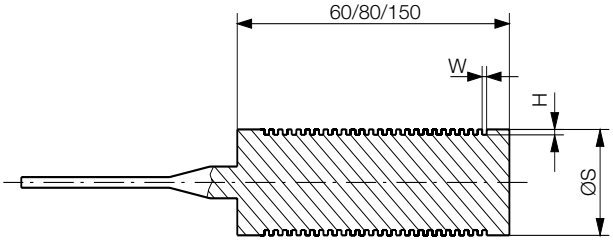

This Heatlock series, below, is currently being replaced by the A1-series of nozzles.
Before you design check availability, stock is gradually decreased.
Spare parts will be available until at least end of 2007 (apart form NPT1 bodies)

N40

For shot weight < 1000 g. Corresponds to a machine size up to approx. 400 ton.

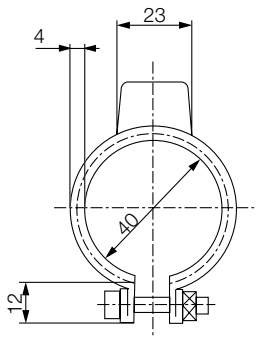

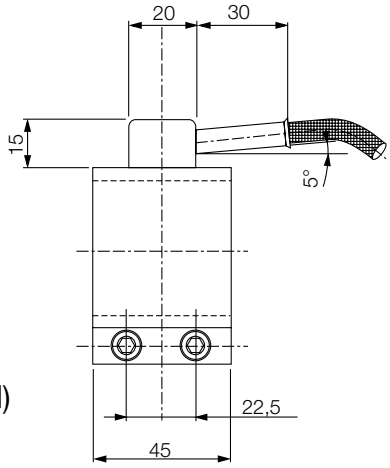

Band heater (included)
B040045250

When ordering:
Fill out the form below and specify your nozzle. This form also available as PDF at **www.heatlock.com**
Fax this sheet to us:
+46 511 172 85

Your address

Company	
Name	
Address	
Phone	
Fax	
Email	
Qty	
Notes by Heatlock	

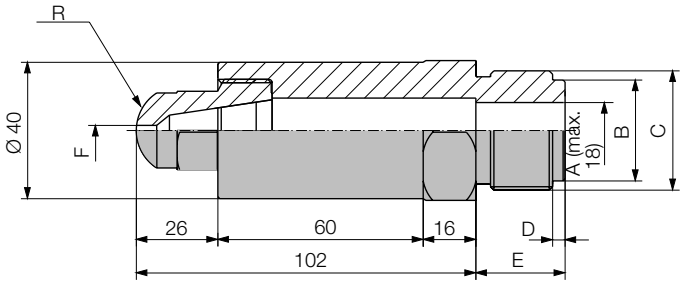

"Filter type" means the size of the body followed by the size of the nozzle. for example **N40M21**

State the following when ordering:							Filter type
A	B	C	D	E	R	F	

M1

	M11	M12	M13	M14	M15
H	1	1	2	1,5	2
W	0,8	1	1	1,5	1,5
Flow area	130	150	300	270	360

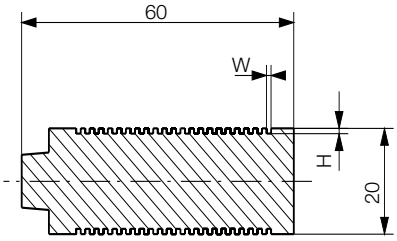

M2

	M21	M22	M23	M24	M25	M26	M27	M28
H	0,2	0,3	0,4	0,5	0,6	0,8	1	1,5
W	50	50	50	50	50	50	50	50
Flow area	60	90	120	150	180	240	300	450

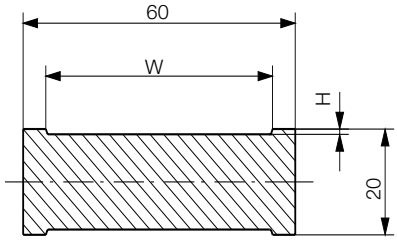

M3

	M31	M32	M33	M34	M35
H	1	1	2	1,5	2
W	0,8	1	1	1,5	1,5
Flow area	130	150	300	270	360

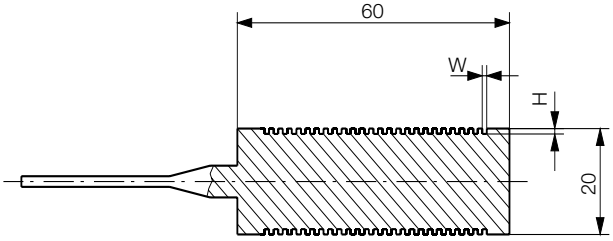

Date: 031002, © LKM Heatlock Co Ltd

This Heatlock series, below, is currently being replaced by the A1-series of nozzles.
Before you design check the nozzle series is gradually decreased.
Spare parts will be available until at least end of 2007 (apart form NPT1 bodies)

N50

For shot weight <5000 g. Corresponds to a machine size from 400 to 1000 ton

When ordering:
Fill out the form below and specify your nozzle. This form also available as PDF at **www.heatlock.com**
Fax this sheet to your local distributor of Heatlock.

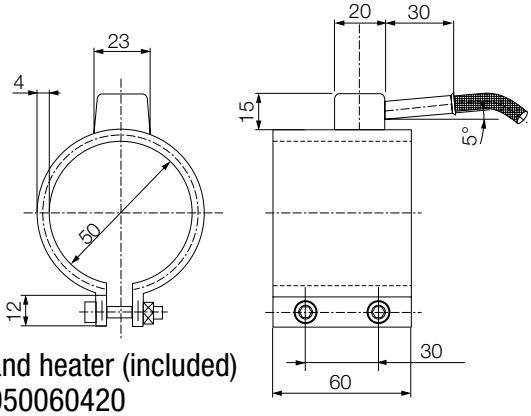

Band heater (included)
B050060420

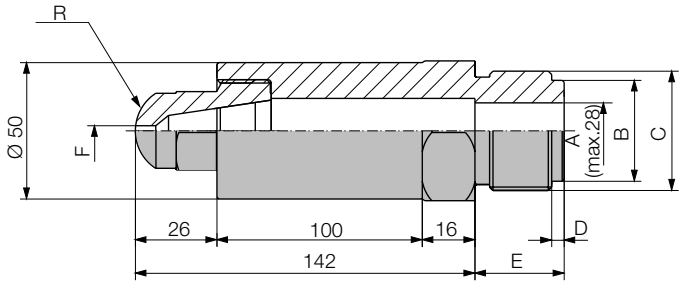

"Filter type" means the size of the body followed by the size of the nozzle. for example **N50M21**

Your address

Company	
Name	
Address	
Phone	
Fax	
Email	
Qty	
Notes by Heatlock	

State the following when ordering:							Filter type
A	B	C	D	E	R	F	

M1	M11	M12	M13	M14	M15	M16
H	1	1	2	1,5	2	2
W	0,8	1	1	1,5	1,5	2
Flow area	224	280	560	504	672	704

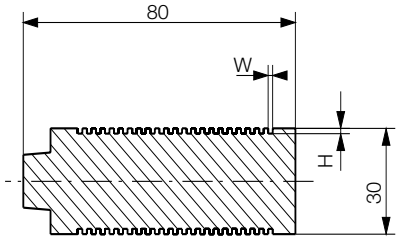

M2	M21	M22	M23	M24	M25	M26	M27
H	0,2	0,3	0,4	0,5	0,6	0,8	1
W	70	70	70	70	70	70	70
Flow area	112	168	224	280	336	448	560

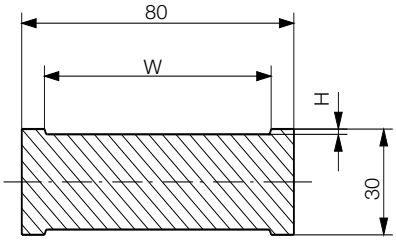

M3	M31	M32	M33	M34	M35	M36
H	1	1	2	1,5	2	2
W	0,8	1	1	1,5	1,5	2
Flow area	224	250	560	504	672	704

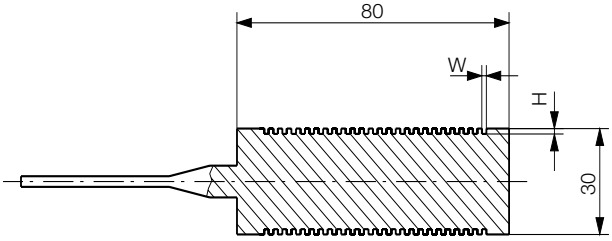

Pressure drop analysis of PA6 (Nylon) during using Filter Nozzle

Material:	PA6 (nylon) Bayer (Durethan-B-30-S)
Injection Pressure:	120 MPA
Injection time:	0,5 sec.
Nozzle Temp.:	270 °C

item / nozzle	Pressure drop MPa	percentage of pressure drop, %	Temperature increase, °C
(No screen inside)	0,11	0	0,03
Screen with W=1,5 H=1,5	1,53	1,42	1,5
Screen with W=24 H=0,8	1,63	1,52	1,63

Screen with W=1,5 H=1,5

(Flow) Average Temperature

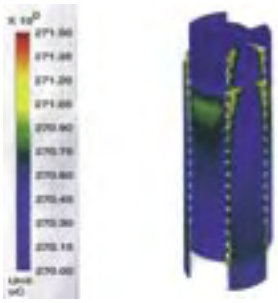

Temperture analysis during material flow in screen.

Pressure drop of screen with W=1,5 H=1,5

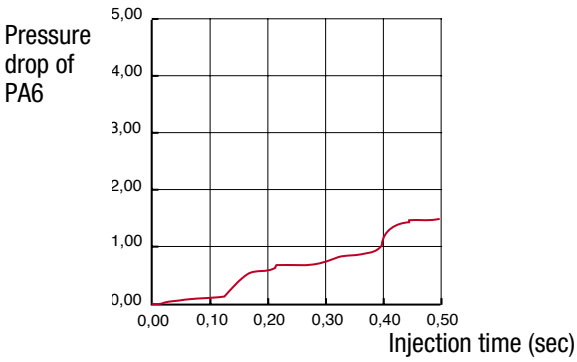

Screen with W=24 H=0,8

(Flow) Average Temperature

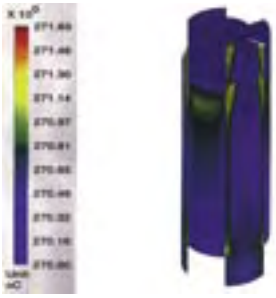

Temperture analysis during material flow in screen.

Pressure drop of screen with W=24 H=0,8

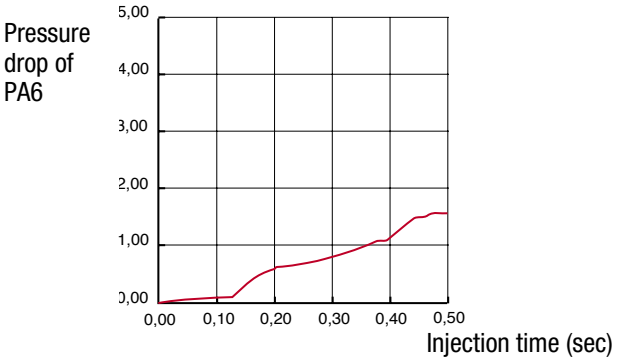

Date: 031002, © LKM Heatlock Co Ltd

Pressure drop analysis of PP during using Filter Nozzle

Material:	PP Pro-Fax (7633)
Injection Pressure:	120 MPA
Injection time:	0,5 sec.
Nozzle Temp.:	200 °C

item / nozzle	Pressure drop MPa	percentage of pressure drop, %	Temperature increase, °C
(No screen inside)	0,86	0	0,13
Screen with W=1,5 H=1,5	3,87	3,01	1,3
Screen with W=24 H=0,8	4,07	3,21	1,5

Screen with W=1,5 H=1,5

Screen with W=24 H=0,8

(Flow) Average Temperature

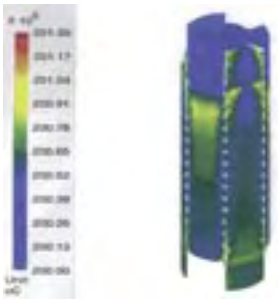

Temperture analysis during material flow in screen.

(Flow) Average Temperature

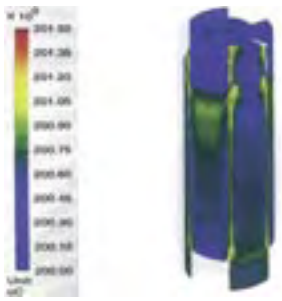

Temperture analysis during material flow in screen.

Pressure drop of screen with W=1,5 H=1,5

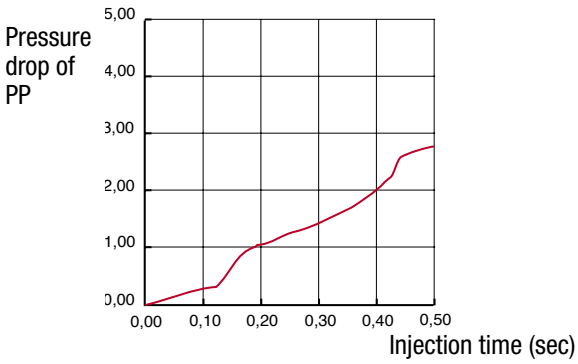

Pressure drop of screen with W=24 H=0,8

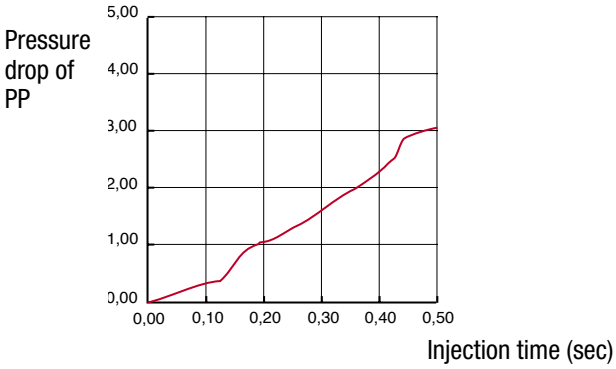

Pressure drop analysis of ABS during using Filter Nozzle

Material:	ABS Chi-Mei (PA707)
Injection Pressure:	120 MPA
Injection time:	0,5 sec.
Nozzle Temp.:	230 °C

item / nozzle	Pressure drop MPa	percentage of pressure drop, %	Temperature increase, °C
(No screen inside)	0,99	0	0,3
Screen with W=1,5 H=1,5	4,68	3,69	3,11
Screen with W=24 H=0,8	4,96	3,97	3,43

Screen with W=1,5 H=1,5

(Flow) Average Temperature

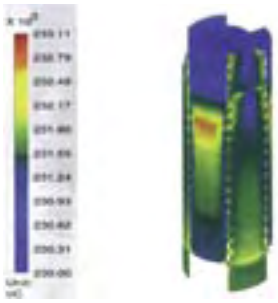

Temperture analysis during material flow in screen.

Pressure drop of screen with W=1,5 H=1,5

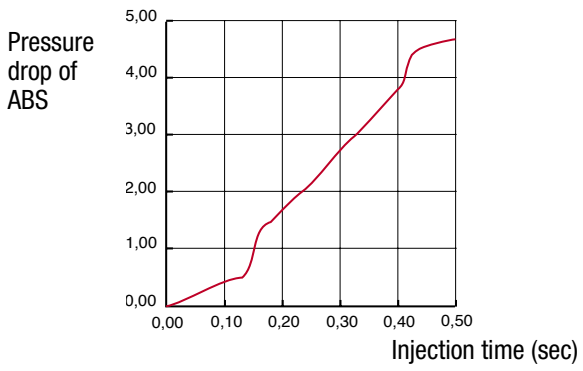

Screen with W=24 H=0,8

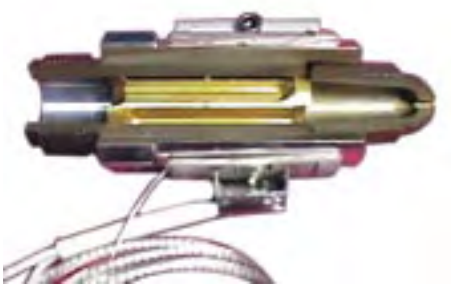

(Flow) Average Temperature

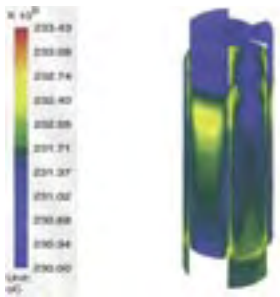

Temperture analysis during material flow in screen.

Pressure drop of screen with W=24 H=0,8

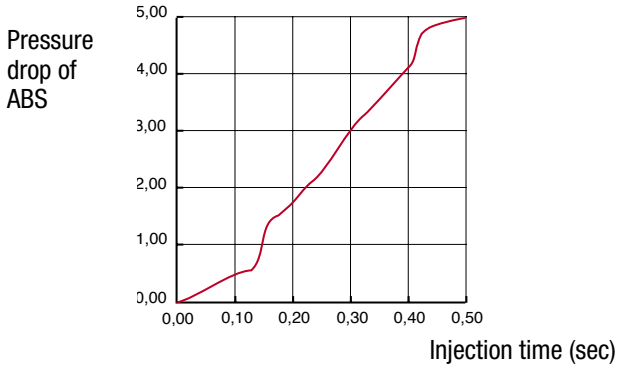

Date: 031002, © LKM Heatlock Co Ltd

This Heatlock series, below, is currently being replaced by the A1-series of nozzles.
Before you design check availability, stock is gradually decreased.
Spare parts will be available until at least end of 2007 (apart form NPT1 bodies)

APPENDIX: BUSHING ASSEMBLY

HEATLOCK®

This Heatlock series, below, is currently being replaced by the A1-series of nozzles.
Before you design check availability, stock is gradually decreased.
Spare parts will be available until at least end of 2007 (apart form NPT1 bodies)

Content Appendix:

ESB1/PPB1	3
ESB2	7
ESB3	11
ESB4	15
PPB2	19
PPB3	23
NPT1/NPT1-Xtnd	27
NPT2	31
NPT3	33
TOP2	37

© LKM Heatlock Co Ltd

This Heatlock series, below, is currently being replaced by the A1-series of nozzles.
Before you design check availability, stock is gradually decreased.
Spare parts will be available until at least end of 2007 (apart form NPT1 bodies)

© LKM Heatlock Co Ltd

This Heatlock series, below, is currently being replaced by the A1-series of nozzles.
Before you design check availability, stock is gradually decreased.
Spare parts will be available until at least end of 2007 (apart form NPT1 bodies)

Montering av balk / Manifold Assembly / Einbau des Verteilerbalkens

HEATLOCK® ESB / PPB1

Art. Nr: CAI-ESB1 Rev:01
Art. Nr: CAI-PPB1 Rev:01

svenska

Kontrollera följande innan varmkanalsbalken monteras slutgiltigt (se översikten på vänster sida):

1. Justera in all keramik , isolering för varje bussning så att samtliga ligger på samma nivå som Plan "B".
2. Sätt dit bussningarna och kontrollera att bussningarna / torpedernas bakre plan ligger inom samm höjd, 0,01 mm, enligt mätvärdesnivå "C". Använd tre mätpukter på respektive bussning.
3. Sätt ihop keramiken KEM03001017 med stödet DSP0353010, mät upp totalhöjden, (ca.24mm). Mät upp och minska denna höjd med det förborrade djupet för keramiken i varmkanalbalken, (ca. 2 mm) samt det uppmätta måttet mellan plan "C" och plan "B" (ca. 15,5 eller 20 mm beroende på bussning), återstående ca 6,5 eller 2 mm försänkes i formplattan. Viktigt är att varmkanalbalken ligger i samma nivå som bussningarna och inte glappar eller "rullar" under centrumstödet.
4. Om varmkanalbalken skall bultas fast kontrollera då att hålbilden i balken överenstämmer med hålbilden i formplattan.
5. Sätt ihop det bakre keramiken KE02500305 med stödet DSP0300306 / DSP0300312, försäkra Dig om att keramiken bottnar i stödet. Mät upp och kontrollera höjden på samtliga enheter. Om eventuell avikelse förekommer , slipa in samtliga till samma höjd, inom 0.005mm, slipa på stödets undersida. Fixera sedan denna enhet med stift DW03X12 i de förborrade hålen i balken. Korrigera även här luftspalten som skall råda i kallt tillstånd som krävs för värmeexpandering i enlighet med tabell 1. Plan "D".
6. Lägg varmkanalbalken på ingötsbussningarna, som centreras i centrumstödet KEM03001017. Vridfixeringen görs med hjälp av en Cylindrisk Pinne som placeras i det förfrästa spåret i balken. Detta görs utan att O-ringarna är monterade.
7. Skruva fast varmkanalbalken med avsedda skruvar om balken skall bultas fast, kontrollera även att samtliga kablar är fria.
8. Kontrollera här nivån på de bakre stödens ovansida -plan "D", samtliga skall nu ligga inom 0.005 mm.
9. Ta av balken montera samtliga O-ringar, återmontera och kontrollera att det inte finns några ledningar i kläm eller som ligger an mot varmkanalbalken.
10. Kontrollera att varmkanalbalken är tillbaka till rätt nivå / höjd från mätvärdesnivå "D". Om varmkanalbalken inte är fastskruvad monteras fästplattan och dras fast så att O-ringarna pressas samman innan denna kontroll genomförs. Värm upp systemet till drifttemperatur innan fästplattan tas bort för den sista kontrollen.

Bänkprovet är viktigt. Det visar om de elektriska komponenterna och ledningsdragningen fungerar. Ju fler delar du vet fungerar till 100 %, desto bättre.

english

Check the following before the manifold is finally assembled (see overview on the left side):

1. Adjust all the ceramics, insulation for each bushing so that they are all at the same level as Plan "B".
2. Put in the bushings and check that the bushings / torpedoes rear plane is at the same height, 0,01 mm, according to the measurement level "C". Use three measuring points in each bushing.
3. Assemble the ceramic KEM03001017 with the support DSP0353010, measure the total height (approx.24mm). Measure and reduce this height by the pre-bored depth of the ceramic in the manifold, (approx. 2 mm) and the measured distance between plane "C" and plane "B" (approx. 15,5 or 20 mm depending on the bushing), the remaining 6,5 or 2 mm is countersunk in the form plate. It is important that the manifold is at the same level as the bushings and don't have too much play or "roll" under the central support.
4. If the manifold is to be bolted check that the shape of the hole in the manifold matches the hole shape in the cavity plate.
5. Assemble the back support KE02500305 with the support DSP0300306 / DSP0300312, make sure that the ceramic reaches the bottom of the support. Measure and check the height of all the units. If there are any discrepancies, adjust all to the same height within 0.005 mm, work with the underside of the support. Fix this with dowel DW03X12 in the pre-bored holes in the manifold. Correct here for the air gap which there shall be in cold condition to allow for heat expansion according to table 1. plane "D".
6. Put the manifold on the bushings, which is centred using the ceramic center support KEM03001017. Torsion fixing is done with the help of dowels which are placed in the pre-milled slot in the manifold. This is done without the O-rings mounted.
7. Tighten the manifold with the screws provided if the manifold is to be bolted, check that all the cables are free.
8. Check the level of the upper part of the rear support plane "D", they shall all be within 0.005 mm.
9. Take off the manifold, assemble all the O-rings, re-assemble and check that there are no trapped cables or cables laying against the manifold.
10. Check that the manifold is back at the right level/height from the measurement level "D". If the manifold isn't fixed the fixing plate is mounted and tightened so that the O-rings are pressed together before the control is carried out. Heat up to running temperature before the clamp plate is removed for the final check.

Bench testing is important. It proves the electrics and wiring. The more areas that you know are working 100% the better.

deutsch

Vor dem endgültigen Einbau der Heißkanalplatte muss Folgendes beachtet werden (siehe links):

1. Justieren Sie die keramische Zentrierung, die Isolierung jeder Düse so, dass sämtliche auf der gleichen Ebene, wie in der Abb. unter "B" angegeben, liegen.
2. Bringen Sie die Düsen an und kontrollieren Sie, dass der hintere Teil der Düsen/Torpedos innerhalb der gleichen Höhe , 0,01 mm, laut Messwertstufe "C", liegt. Bedienen Sie sich dreier Messpunkte an der entsprechenden Düse.
3. Einbau der keramischen Zentrierung KEM03001017 mit Zentrierhülse DSP0353010 und Messen der Gesamthöhe (ca 24 mm):
   Messen und vermindern Sie die Höhe mit den vorgebohrten Durchgängen für die keramische Zentrierhülse an der Heißkanalplatte, (ca 2 mm) sowie den Messwert zwischen Stufe "C" und "B" (ca 15,5 oder 20 mm je nach Wahl der Düse). Die verbleibenden ca 6,5 oder 2 mm werden in die Formplatte versenkt. Wichtig dabei ist, dass die Heißkanalplatte auf gleicher Ebene wie die Düsen liegt und nicht schleudern oder schlingern darf.
4. Wenn die Heißkanalplatte verbolzt werden soll, ist darauf zu achten, dass die Durchgangs- und Gewindebohrungen im Verteilerbalken mit der der Formplatte genau übereinstimmen.
5. Verbinden Sie den hinteren keramischen Stützring KE02500305 mit der hinteren Hülse DSP0300306/DSP0300312, vergewissern Sie sich, dass Sie richtig eingesetzt ist. Vermessen und kontrollieren Sie die Höhen an sämtlichen Einheiten. Sollten eventuelle Abweichungen vorkommen, korriegieren Sie diese durch Abschleifen auf die gleiche Höhe, innerhalb einer Toleranz von 0.005 mm, schleifen Sie die Unterseite der Hülse. Fixieren Sie anschliebend diese Einheit mit dem Stift DW03X12 in die vorgebohrten Durchgänge am Verteiler. Korrig-ieren Sie auch hier den Luftspalt im kalten Zustand zum Zwecke der Wärmeausdehnung. Vgl. Tabelle 1. "D".
6. Legen Sie die Heißkanalplatte auf die Eingussdüsen, die in der keramischen Zentrierung KEM03001017 zentriert werden. Die Drehfixierung geschieht mit Hilfe eines zylindrischen Stiftes, der an der vorgefrästen Nute am Verteiler angebracht wird. Dieser Vorgang wird ohne das Vorhandensein von O-Ringen durchgeführt.
7. Schrauben Sie den Verteilerbalken, falls die Platte verschraubt werden soll, mit den vorgesehenen Schrauben fest. Überprüfen Sie, dass sämtliche Leitungen freigelegt sind.
8. Kontrollieren Sie die Werte der Oberseite der hinteren keramischen Stützscheibe (vgl. "D"). Die Toleranzgrenze von 0,005 mm darf nicht überschritten werden.
9. Nehmen Sie den Verteiler ab, legen Sie sämtliche O-Ringe an, bringen Sie den Verteiler wieder an und versichern Sie sich, dass keine Leitungen eingeklemmt sind oder an der Heißkanalplatte anliegen.
10. Überprüfen Sie, dass sich die Heißkanalplatte, vom Ausgangswert "D" aus, wieder auf der richtigen Höhenstufe befindet. Falls die Heißkanalplatte noch nicht angeschraubt ist, wird die Befestigungsplatte montiert und fest angezogen, so dass die O-Ringe zusammengepresst werden, bevor die Prüfung durchgeführt wird. Erwärmen Sie das System auf Betriebstemperatur, bevor die Befestigungsplatte zur letzten Kontrolle entfernt wird.

Eine Endabnahme ist notwendig und wichtig. Sie garantiert die Richtigkeit der Funktionen aller elektrischen Komponenten und Leitungen. Je mehr Sie sich von der 100%ige Funktionstauglichkeit der Teile überzeugen, desto erfolgreicher die Arbeit.

6

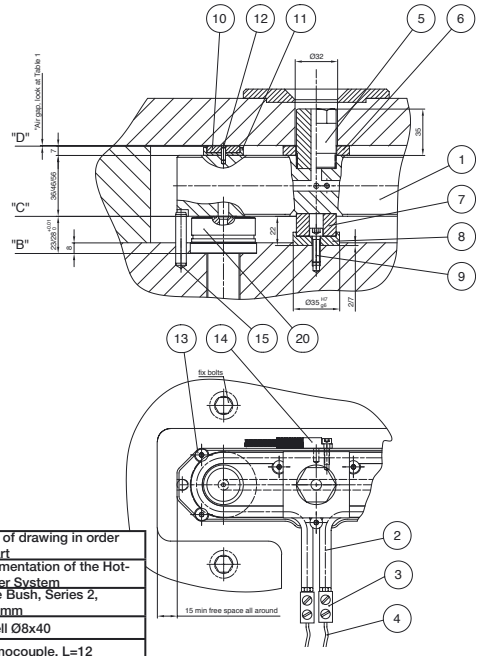

Table 1 / tabell 1 / Tabelle 1

Heat expansion			
°C	T=36	T=46	T=56
200	0.08	0.10	0.13
250	0.10	0.13	0.16
300	0.12	0.16	0.20
350	0.14	0.18	0.23

Item	Qty	Art. Nr.	Description
31	1	HEATMAN-PROOF	Proof of drawing in order to start
30	1	HEATMANDOC	Documentation of the Hot-Runner System
20	2	ESB2046102	Sprue Bush, Series 2, L=46 mm
15	1	DW08X40	Dowell Ø8x40
14	1	TC00040180	Thermocouple, L=12
13	14	MF6S08X008	Screw M5x8
12	2	DW03X12	Dowell Ø3x12
11	2	DSP0300306	Back Spacer
10	2	KE02500305	Ceramic Back Support
9	1	CS06020	Screw M6x20
8	1	DSP0353010	Center Location spacer
7	1	KEM03001017	Ceramic Center Spacer
6	1	DSPP503107	Purge Guard
5	1	DSP4503008	Feedbush
4	4	MHWIRE050	Wire
3	4	MHCONN001	Ceramic Connector
2	2	MHI02400	Tubular Heater
1	1	MI2400004608	Standard Manifold, CC=240mm, Feed=Ø8 mm

© LKM Heatlock Co Ltd

SE Anvisning för inbyggnad.
Max. tillåten anläggningskraft
från maskinmunstycke: 40 kN

GB Instructions for installations.
Max permitted contact force
from machine nozzle: 40 kN

DE Einbauanleitungen
Höchstzulässige Anpreßkraft
der Maschinendüse: 40 kN

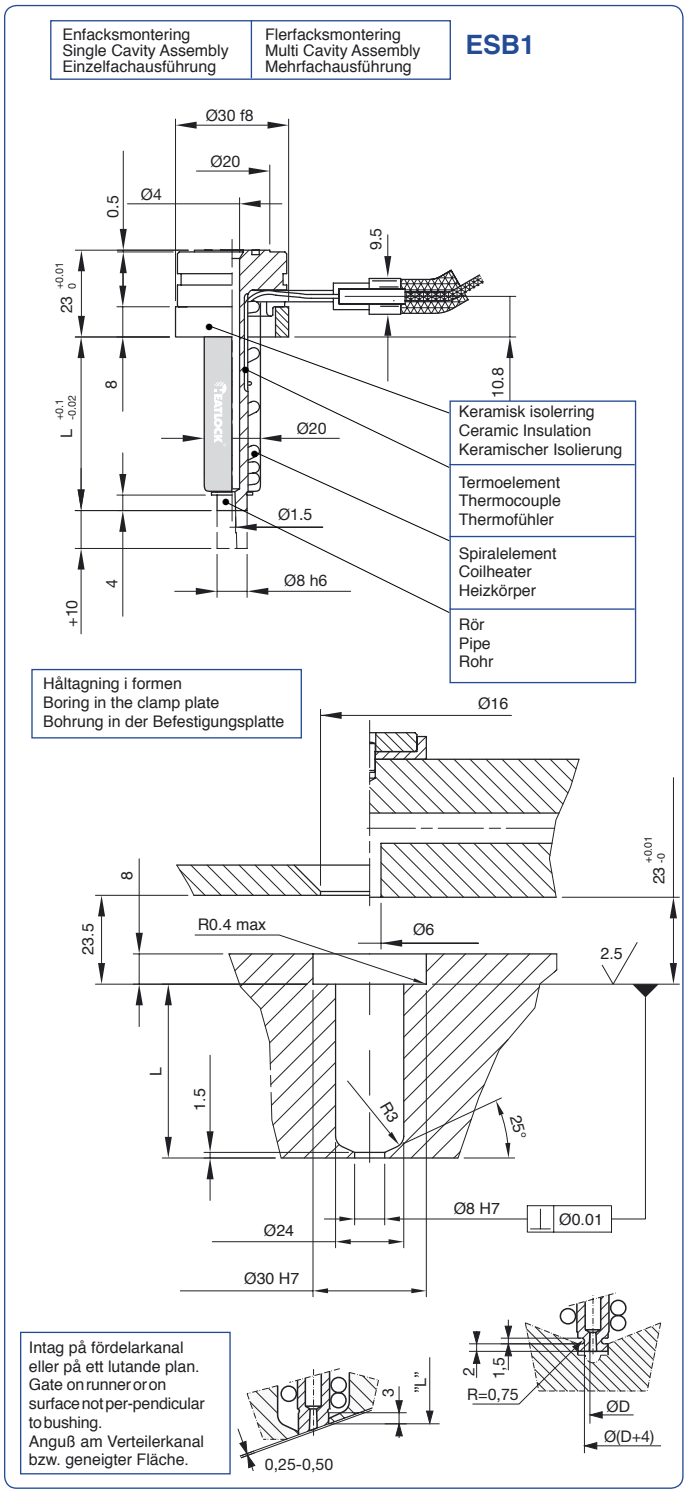

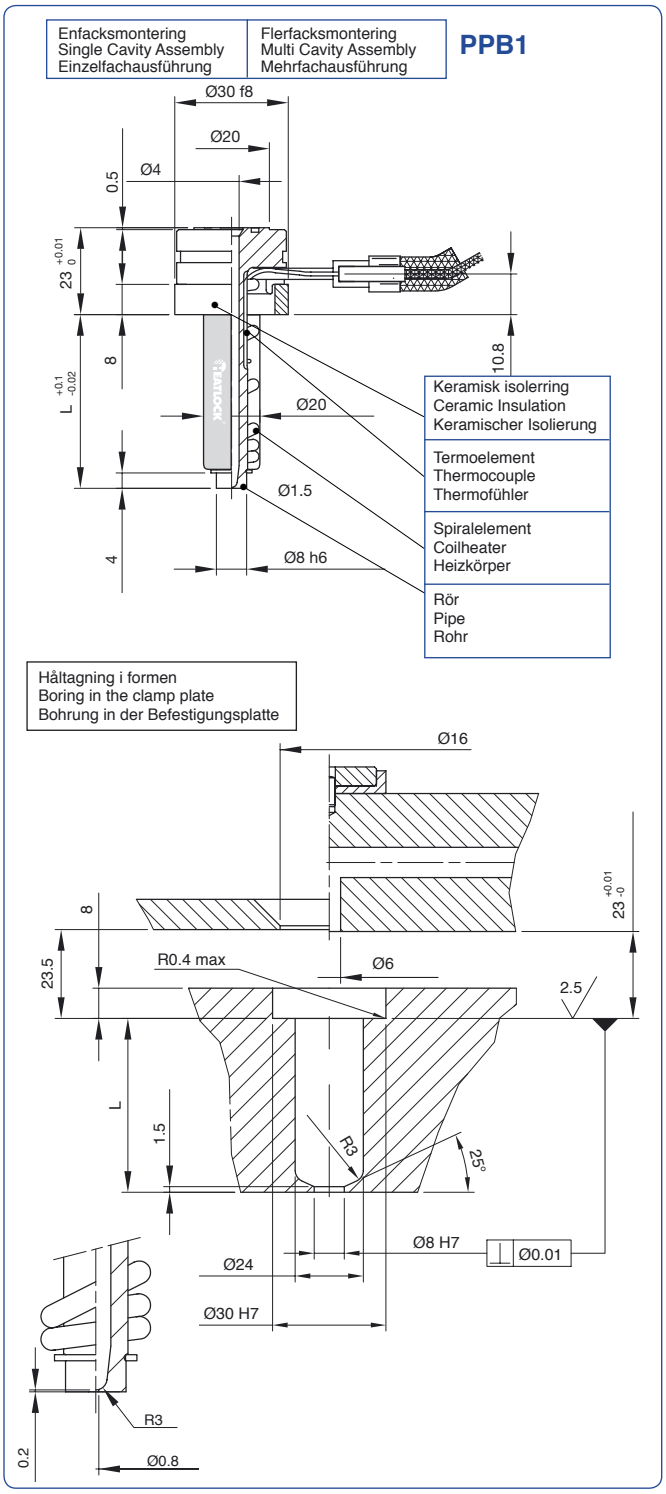

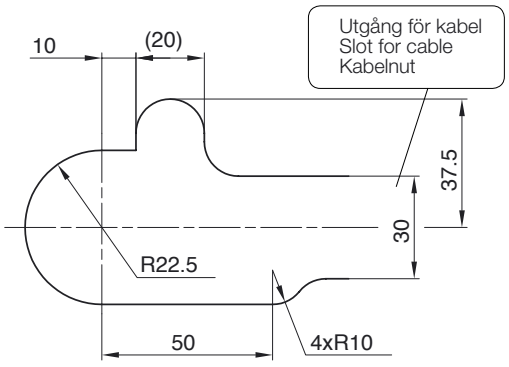

SE Håltagning för bussning med eller utan ringelement

GB Boring in the clamp plate for the bush with or without bandheater

DE Bohrung in der Befestigungsplatte für Düsen mit oder ohne Ringheizer

Art.Nr.
B028013180

© LKM Heatlock Co Ltd

This Heatlock series, below, is currently being replaced by the A1-series of nozzles.
Before you design check availability, stock is gradually decreased.
Spare parts will be available until at least end of 2007 (apart form NPT1 bodies)

svenska

Vid bearbetningstemperaturer över 250 - 260°C kan det vara fördelaktigt att montera ett bakre ringelement på munstycket. Detta gäller även när skärkraftskänsliga material skall bearbetas.

OBS! Detta element måste anslutas till en manuell regulator och bör under inga omständigheter parallellkopplas med spiralelementet och dess termoelement.

Färgmärkning på termoelement.

Svart kabel + (järn),vit kabel–.

Termoelementets kopplingshylsa har en max. temperaturbeständighet på 240°C.

english

When temperatures of 250–260 °C and above are needed it may be advantageous to install a heater band at the back end. This is also the case when shearsensitive materials are to be moulded.

NB This element must be connected to a manual controller and should under no circumstances be connected in parallel with the coilheater and its thermocouple.

Colour code for thermocouple wires.

Black wire + (Iron) White wire —.

The connector sleeve of the thermocouple has a max. temperature resistance of 240 °C.

deutsch

Sind Temperaturen von 250-260° C oder höher erforderlich, ist die Anbringung eines zusätzlichen Ringheizkörpers am hinteren Heißkanalende zu empfehlen. Dies gilt auch für die Verarbeitung von scherkraftempfindlichen Kunststoffen.

ACHTUNG! Dieser Heizkörper ist an seinen eigenen, handbetätigten Regler anzuschließen. Er darf keinesfalls mit dem Spiralheizkörper und dessen Temperaturfühler parallelgeschaltet werden.

Farbkennzeichnung des Temperaturfühlers:

Schwarz Kabel + (Eisen), Weiß Kabel –

Die Anschlußhülse des Temperaturfühlers ist bis 240° C hitzebeständig.

Före inbyggnad mät upp bussningens nominella ”L”-mått, lägg därefter till längdutvidgningen så att bussningens spets ligger exakt vid intagspunkten i uppvärmt tillstånd.

To ensure minimum vestige on the part.Measure the actual “L” measurement on each bush, add the length expansion according to the adjacent table to get the hole depth (“L”+X,xx) to be drilled in the cavity plate

Vor dem Einbau Nennmaß ”L” der Düse bestimmen und um den Wert der Längenausdehnung erweitern, damit die Düsenspitze im heißen Zustand genau am Angußpunkt liegt.

Length expansion at: °C=”L”+X,xx

°C	26	36	46	86	106
200	0,03	0,04	0,05	0,10	0,12
250	0,04	0,05	0,06	0,12	0,15
300	0,04	0,06	0,08	0,14	0,18
350	0,05	0,07	0,09	0,17	0,21

ESB1: Intaget levereras med Ø1,5mm, som kan brotchas upp till Ø 3 mm vid behov.

PPB1: Intaget levereras med Ø0,8 mm, som kan brotchas upp till Ø 1,5 mm vid behov.

Diagrammet ger riktvärde på den intags-diameter, som behövs för olika plaster och skottvikter.

OBS! En för liten intagsdiameter betyder bl.a. att onödigt hög temperatur måste ställas in på munstycket för att intaget ej skall frysa mellan skotten.

1. Lågviskösa (PS, PE, PP)
2. Medelviskösa (ABS, SAN, PA, POM)
3. Högviskösa (PC, PMMA, Noryl, fyllda material)

ESB1: Supplied with a gate Ø1,5mm wich can be reamed up to Ø 3 mm.

PPB1: Supplied with a gate Ø0,8mm wich can be reamed up to Ø 1,5 mm.

The diagram gives guideline figures for the gate diameter needed for different plastics and shot weights.

Note: If the gate diameter is too small, an unnecessarily high bushing temperature will have to be set for the gate not to freeze between shots.

1. Low-viscosity material (PS, PE, PP)
2. Medium-viscosity material (ABS,SAN, PA, POM)
3. High-viscosity material (PC, PMMA, Noryl)

ESB1: Bei Lieferung beträgt der Angußdurchmesser 1,5 mm. Für höhere Schußgewichte kann der Angußdurchmesser bis auf 3 mm aufgerieben werden.

PPB1: Bei Lieferung beträgt der Angußdurchmesser 0,8 mm. Für höhere Schußgewichte kann der Angußdurchmesser bis auf 1,5 mm aufgerieben werden.

Das Diagramm gibt Richtwerte für den bei unterschiedlichen Kunststoffen und Schußgewichten benötigten Angußdurchmesser an.

ACHTUNG! Zu geringer Angußdurchmesser erfordert eine unnötig hohe Temperatur der Düse, damit der Anguß zwischen den Schüssen nicht erstarrt. Säubern der Düse, auswechseln von Spiralheizkörpen bzw. Temperaturfühler.

1. Niederviskose Kunststoffe (PS, PE, PP)
2. Mittelviskose Kunststoffe (ABS, SAN, PA, POM)
3. Hochviskose Kunststoffe (PC, PMMA, Noryl)

Skottvikt per munstycke
Shot-weight per nozzle
Schußgewicht je Düse

g

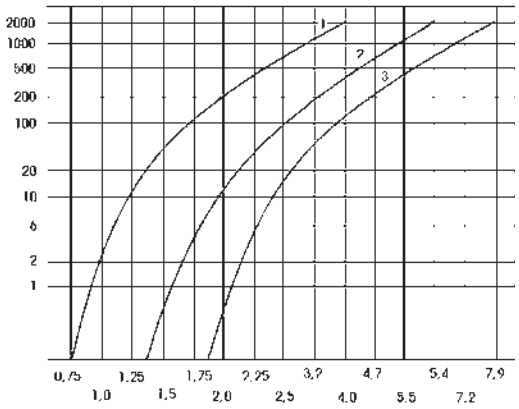

Intagsdiameter
Gate diameter
Angußdurchmesser

mm

© LKM Heatlock Co Ltd

This Heatlock series, below, is currently being replaced by the A1-series of nozzles.
Before you design check availability, stock is gradually decreased.
Spare parts will be available until at least end of 2007 (apart form NPT1 bodies)

Montering av bussning / Bushing Assembly / Einbau von Heatlock-Düsen

1

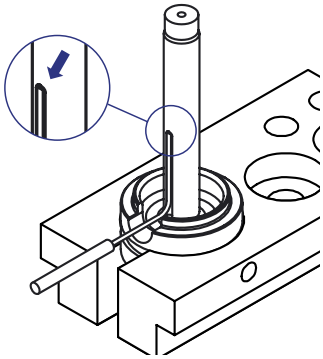

SE Montera TC enligt figur.

GB Assemble the TC as in the drawing.

DE Einbau von TC nach Abbildung.

2

SE Montera elementet genom att försiktigt ”skruva” upp spiralen något. Trä över elementet på pipan och släpp efter med verktyget. Kontrollera att elementet smiter åt runt pipan och bottnar mot skallen, samt att elementet linjerar med den fasade kanten vid pipans spets.

GB Assemble the coilheater by carefully ”unscrewing” the coil spring slightly. Thread the heater over the pipe and release using the tool. Check that the coilheater fits tightly around the pipe and touches the head, and that the coilheater is in line with the chamfered edge at the point of the pipe.

DE Montieren Sie den Heizkörper durch vorsichtiges ”nach oben schrauben” der Spirale. Ziehen Sie den Heizkörper über das Rohr und lockern Sie diesen mit Hilfe eines Werkzeugs. Vergewissern Sie sich, dass der Heizkörper am Rohr richtig anliegt und am Kopf richtig ansitzt und kontrollieren Sie, dass der Heizkörper entlang der abgeschrägten Kante am Ende des Rohrs verläuft.

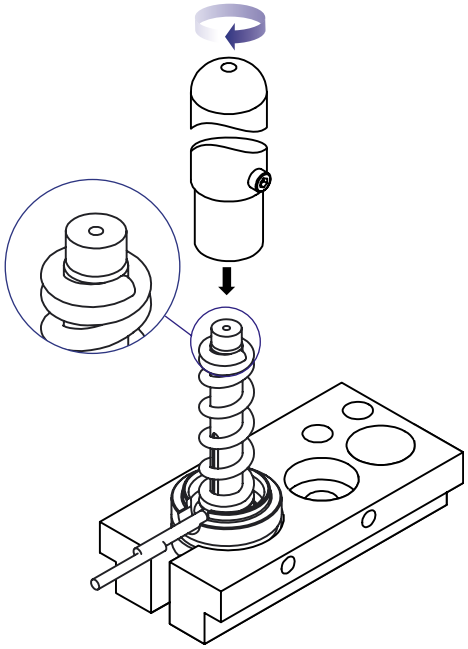

3

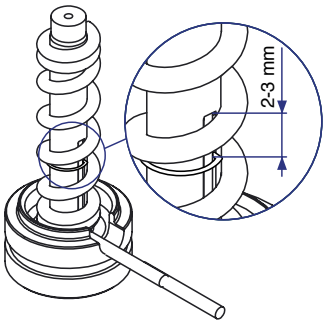

SE Sätt på clips för låsning av TC. Kontrollera höjd enligt figur.

GB Put on the clip for locking the TC. Check the height according to the drawing.

DE Bringen Sie den Sicherungsring für TC an. Kontrollieren Sie die Höhe gemäb Abb.

5

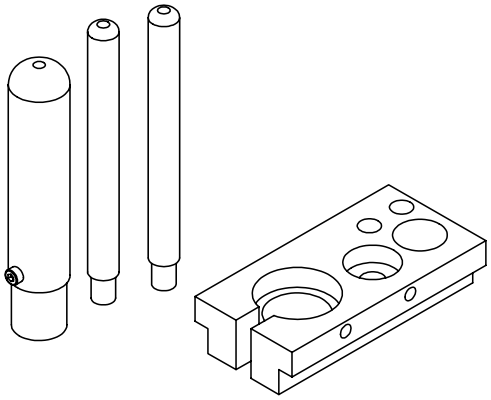

SE Denna monteringsanvisning baseras på att du använder vårt monteringskit **EBPPNP1KIT**.

GB This assembly instruction is based on the use of our assembly kit **EBPPNP1KIT**.

DE Diese Einbauanleitung geht von der Benutzung unseres Einbaukittes **EBPPNP1KIT** aus.

Heatlock AB © 041001. Notice: latest version always available on our website, www.heatlock.com5

© LKM Heatlock Co Ltd

This Heatlock series, below, is currently being replaced by the A1-series of nozzles.
Before you design check availability, stock is gradually decreased.
Spare parts will be available until at least end of 2007 (apart form NPT1 bodies)

ESB2 ..., ELECTRIC SPRUE BUSH

Instructions for installation.

Max permitted contact force from machine nozzle: 4Mp

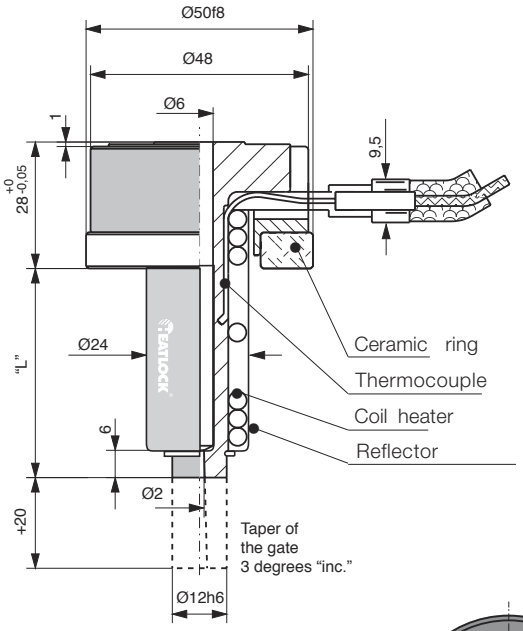

Boring dimensions

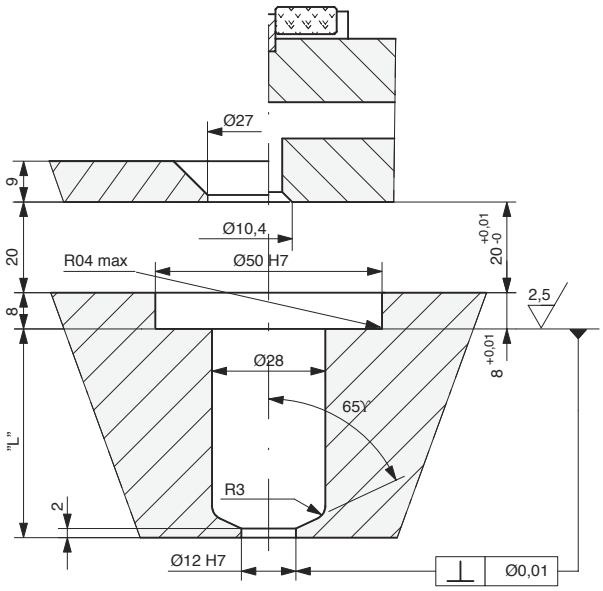

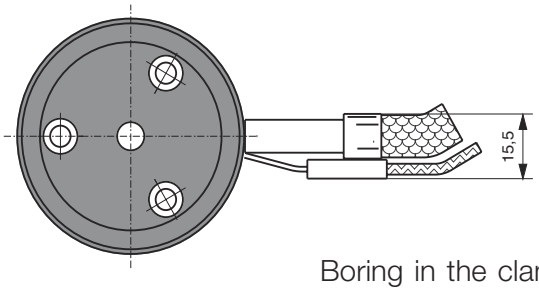

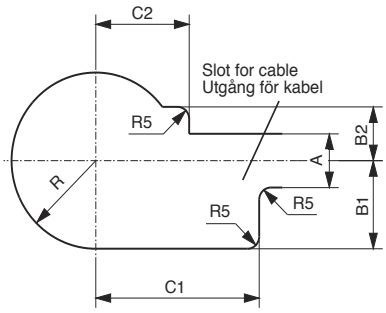

Boring in the clamp plate for the bush with or without bandheater:

Art. nr.	R	A	B1	B2	C1	C2
Bussning	28	20	-	-	-	-
B047015315	36	22	15	22	45	45
B048020180	36	22	36	22	70	40

When designing the bushing heaters we took every possible step to make the heat distribution along the bushing as even as possible. We have thus concentrated the wattage at both ends in order to compensate for heat losses which are the result of metallic contact between bushing and mould. The ceramic insulation is of course also highly important for uniform temperature distribution in the bushing.

When temperatures of 250–260 ºC and above are needed it may be advantageous to install a heater band at the back end. This is also the case when shearsensitive materials are to be moulded.

Note: This element must be connected to its own special manual controller and must not be connected in parallel with the spiral element and its thermocouple.

© LKM Heatlock Co Ltd

This Heatlock series, below, is currently being replaced by the A1-series of nozzles.
Before you design check availability, stock is gradually decreased.
Spare parts will be available until at least end of 2007 (apart form NPT1 bodies)

If the bushing is installed as shown in the diagram, all cables will be protected from plastic.
If possible there shall be no contact between the back end of the bushing and the guide ring of the mould. Such contact will cause a heavy drop in temperature at the back end of the bushing. If the force at which the machine nozzle is pressed against the sprue bushing is greater then that caused by the injection force on the front area of the bushing, nothing is needed to keep bushing in place axially. The bushing can then be installed as shown in the diagram below.

Max permitted contact force from

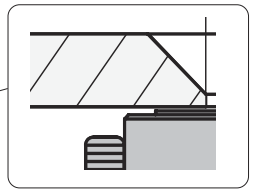

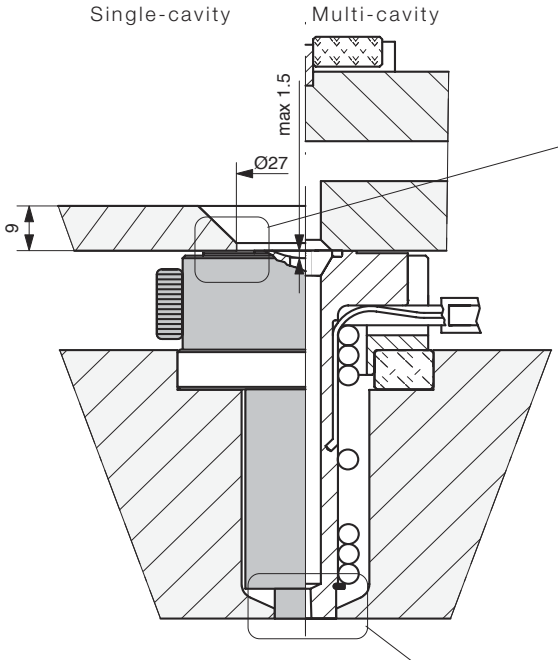

machine nozzle: 4Mp
If a support is needed to fix the bushing axially the contact area must be as small as possible. The support area should preferably be as far as possible from the centre of the bushing. (Not on the flange.)
Preferably an insulation ring part No. KE05002708 shall be placed between the back support and the surface of the bushing.

Colour code for thermocouple wires.

Black (red) wire + (Iron)
White (blue) wire —.

The connector sleeve of the thermocouple has a max. temperature resistance of 240 ℃.

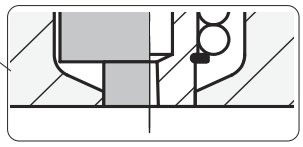

Fitting of the front end of the bushing.

A certain amount of cooling is needed at front end.
It must remain at a temperature low enough to make the plastic solidify. Too much cooling will however cause the plastic in the flow channel to be highly viscous further into the bushing.
The contact surface at the front end may therefore have to be trimmed depending on, for example, temperature wanted and cycle time.
Length of contact at front end can usually be 2mm. For high temperature plastic and for long cycle time a shorter length may be needed (down to about 0,75mm). The fit at the front end in the mould also has an influence on the temperature at that area. A hard fit gives more cooling then a loose one.
On injection moulding with fast-injecting materials it may sometimes be necessary to have a length of contact greater than 2 mm, so that sufficient heat can be carried away from the front face. This may mean increasing the temperature of the bushing during startup and reducing it in continuous operation.

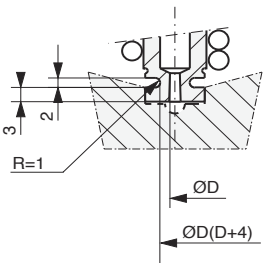

An improved temperature zone separation in the front end of the bush will be achived if a groove is machined as sketch to the right. Usefull when moulding at high temperatures.

Date: 050326, © Heatlock AB
© LKM Heatlock Co Ltd

Length of the bushing.

When fitting the bushing into the mould it is essential to bear in mind that its length increases when it get hot. Approx. elongation of bushing at 200 ℃

L26	approx	0,10 mm
L46	approx	0,17 mm
L66	approx	0,22 mm
L86	approx	0,27 mm
L106	approx	0,30 mm
L136	approx	0,39 mm

The front surface of the bushing must not come into contact with the moving mould half. Bushings with extra stock must be used when any kind of contour is needed at the front end. This is how it should be done. It is not recommended to shorten the bushing below the "L"

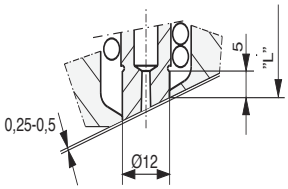

Gate on surface not perpendicular to bush.

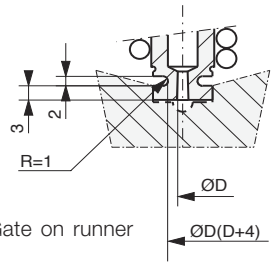

Gate on runner

measurment.
Front diameter of the bushing may be reduced to be as small as possible considering size of the gate. The wall thickness at the front end shall not be less then 2 mm.
A small front diameter of the sprue bushing gives:

- less contact area between bushing and mould with a more even temperature along the bushing as a result.
- the force that will push the bushing out of the mould will be reduced.

Size of gate

Shot weight per nozzle grams

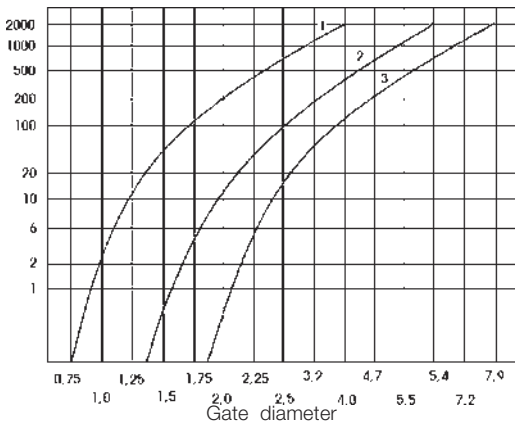

1. Low viscosity PS, PE, PP.
2. Medium viscosity ABS, SAN, PA, POM.
3. High viscosity PC, PMMA, Noryl, PUR, reinforced plastics.

On delivery is the gate 2 mm. Outward cone is 1,5Υ per side. It may be reamed out to 5 mm if necessary.
The diagram above gives a guideline figure for the gate diameter needed for different plastics and shot weights. Note: If the gate diameter is too small, an unnecessarily high bushing temperature will have to be set for the gate not to freeze between shots.

This Heatlock series, below, is currently being replaced by the A1-series of nozzles.
Before you design check availability, stock is gradually decreased.
Spare parts will be available until at least end of 2007 (apart form NPT1 bodies)

The suggested figures are approximate. Gate dimension may be influenced by the shape of the article and the design of the mould etc.

The balance between shot weight, injection rate, tool temperature, temperature pattern opposite gate, cooling around gate and injection pressure are all factors that affect gate size.A small gate freezes quicker than a large gate.
On injection moulding with very short cycle times and short injection times, it may be necessary to design gate cooling so that it does not overheat.
If the sprue bushing is feeding a runner which has a gate into a cavity, it may be suitable to make bushing gate larger then actually necessary. This way pressure drop and shear will be reduced.
If an electric sprue bushing is used to feeding a runner this means that length of flow in cold steel has been reduced equivalent to bushing length. Due to this cross section of the runner can be made smaller then usually. This may be important in order to get shortest possible cycle time.
Begin with a smaller gate than indicated by the table.

Instructions for changing the coilheater or thermocouple.

Disassembly

1. Take off the reflector (aluminium tube)
2. Unscrew the screws at the rear end.
3. Take off the flange.
4. Take of the lock ring at the front end.
5. Take off the spring that keeps thermocouple in place.
6. Take off the tape that keeps heater and thermocouple extensions together.
7. Depending on how hard spiral heater fits the pipe it can either be pulled of or ”unscrewed”. Unscrewing works easily if you push on the spiral heater extension which will open the spiral while at the same time opening the spiral at the other end with a suitable tool. The thermocouple must not follow if the spiral element is rotated or pulled off, since it may break.Treat thermocouple with great care. The tube is only 1 mm diameter.

Assembly.

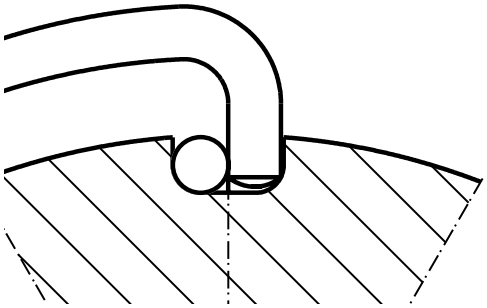

To be done in opposite order to disassembly.
If a new thermocouple is to be fitted it must be bent to fit the bushing. The tip of the thermocouple must be located where the groove ends, i.e. about half-way along the tube. Min. bending radius 3 mm.
Tighten the element so that the heating spiral makes contact with the tube.

If you have any questions about installing the bushing, please get in touch with us.

ESB2

HEATLOCK®
Box 236 S–532 23 Skara
e-mail: hot.runner@heatlock.se
Homepage: http://www.heatlock.se
Phone: +46 511-13200
Fax: +46 511-17285

Heatlock AB 97.06 / ESB2.mont

Date: 050326, © Heatlock AB
© LKM Heatlock Co Ltd

This Heatlock series, below, is currently being replaced by the A1-series of nozzles.
Before you design check availability, stock is gradually decreased.
Spare parts will be available until at least end of 2007 (apart form NPT1 bodies)

HEATLOCK® ESB3 ..., ELECTRIC SPRUE BUSH

Instructions for installation.

Max permitted contact force from machine nozzle: 4Mp

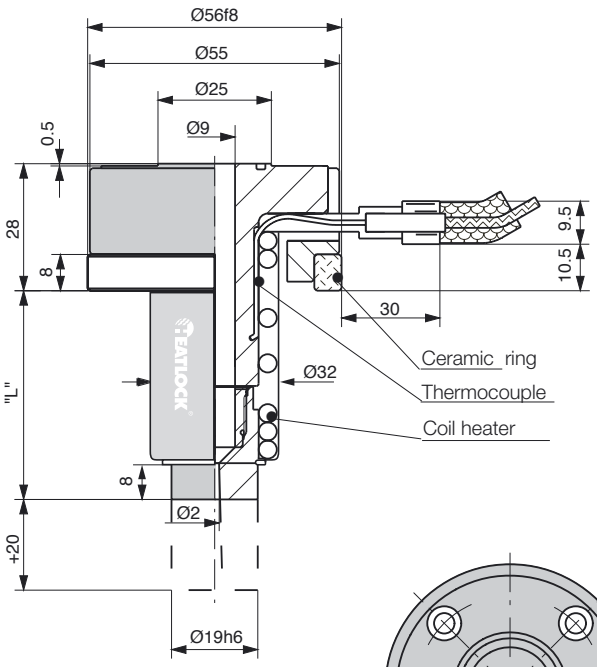

Boring dimensions

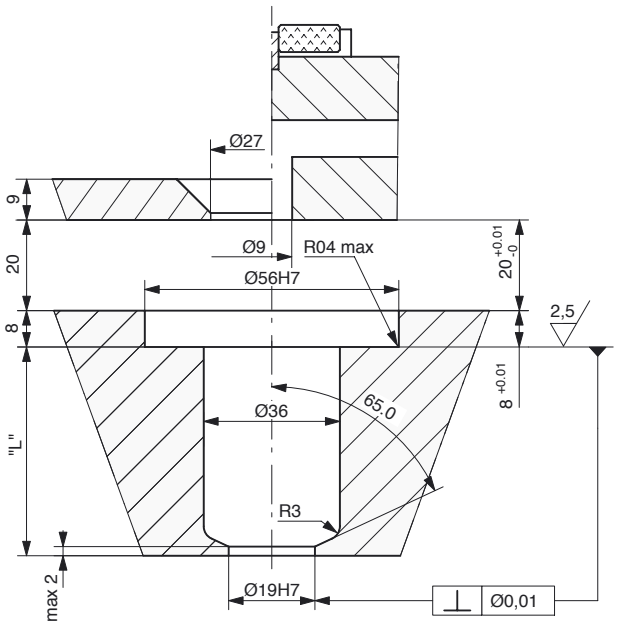

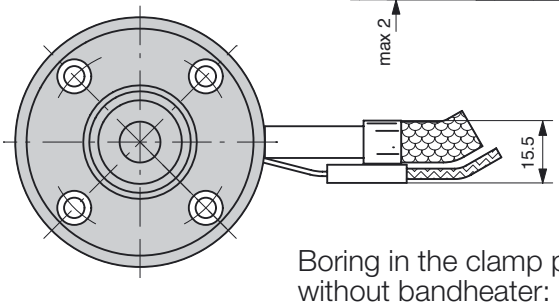

Boring in the clamp plate for the bush with or without bandheater:

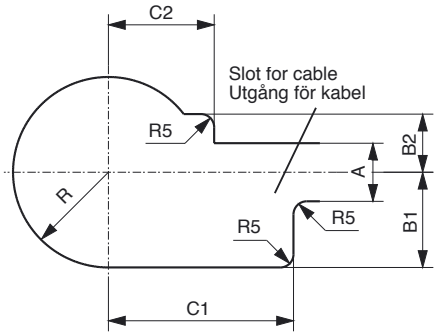

Part No.	R	A	B1	B2	C1	C2
Bush	30	22	-	-	-	-
B055020180	40	22	42	22	85	45

When designing the bushing heaters we took every possible step to make the heat distribution along the bushing as even as possible. We have thus concentrated the wattage at both ends in order to compensate for heat losses which are the result of metallic contact between bushing and mould. The ceramic insulation is of course also highly important for uniform temperature distribution in the bushing.

When temperatures of 250–260 °C and above are needed it may be advantageous to install a heater band at the back end. This is also the case when shearsensitive materials are to be moulded.

Note: This element must be connected to its own special manual controller and must not be connected in parallel with the spiral element and its thermocouple.

Date: 050606, © Heatlock AB

© LKM Heatlock Co Ltd

This Heatlock series, below, is currently being replaced by the A1-series of nozzles.
Before you design check availability, stock is gradually decreased.
Spare parts will be available until at least end of 2007 (apart form NP-11 bodies)

If the bushing is installed as shown in the diagram, all cables will be protected from plastic.
If possible there shall be no contact between the back end of the bushing and the guide ring of the mould. Such contact will cause a heavy drop in temperature at the back end of the bushing.
If the force at which the machine nozzle is pressed against the sprue bushing is greater then that caused by the injection force on the front area of the bushing, nothing is needed to keep bushing in place axially. The bushing can then be installed as shown in the diagram below.

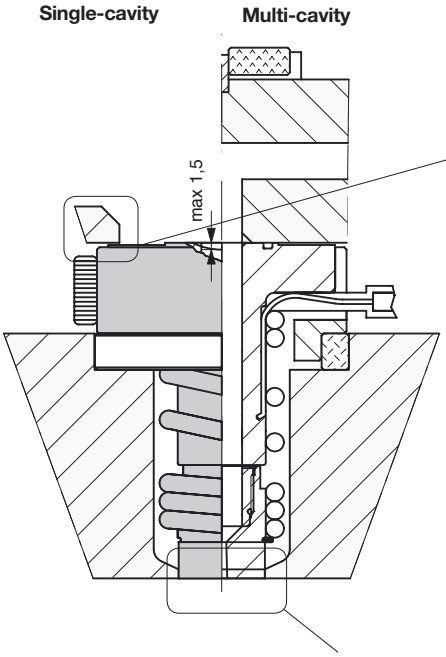

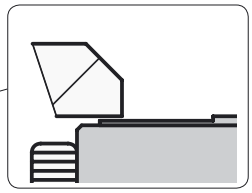

Max permitted contact force from machine nozzle: 4Mp
If a support is needed to fix the bushing axially the contact area must be as small as possible. The support area should preferably be as far as possible from the centre of the bushing. (Not on the flange.)
Preferably an insulation ring part No. KE05604408 shall be placed between the back support and the surface of the bushing.

Color code on Thermocouple

Black (red) wire + (Iron)
White (blue) wire —.
The connector sleeve of the thermocouple has a max. temperature resistance of 240 °C.

Fitting of the front end of the bushing.

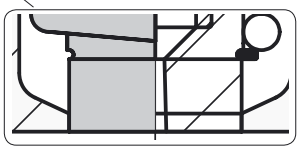

A certain amount of cooling is needed at front end. It must remain at a temperature low enough to make the plastic solidify. Too much cooling will however cause the plastic in the flow channel to be highly viscous further into the bushing.
The contact surface at the front end may therefore have to be trimmed depending on, for example, temperature wanted and cycle time.
Length of contact at front end can usually be 2mm. For high temperature plastic and for long cycle time a shorter length may be needed (down to about 0,75mm). The fit at the front end in the mould also has an influence on the temperature at that area. A hard fit gives more cooling then a loose one.
On injection moulding with fast-injecting materials it may sometimes be necessary to have a length of contact greater than 2 mm, so that sufficient heat can be carried away from the front face. This may mean increasing the temperature of the bushing during startup and reducing it in continuous operation.An improved temperature zone separation in the front end of the bush will be achived if a groove is machined as sketch to the right. Usefull when moulding at high temperatures.

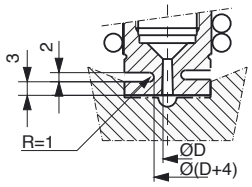

© LKM Heatlock Co Ltd

Length of the bushing.

When fitting the bushing into the mould it is essential to bear in mind that its length increases when it get hot. Approx. elongation of bushing at 200 °C

Length expansion at: °C="L"+X,xx						
°C	46	66	86	116	146	176
200	0,11	0,15	0,20	0,27	0,34	0,40

To ensure minimum vestige on the part, measure the actual "L" measurement on each bush, add the length expansion according to the table to get the hole depth ("L"+X,xx) to be drilled in the cavity plate, (e.g. °C=300, L=46 » X,xx=0,16 mm).

The front surface of the bushing must not come into contact with the moving mould half.
Bushings with extra stock must be used when any kind of contour is needed at the front end. This is how it should be done. It is not recommended to shorten the bushing below the "L" measurment.
Front diameter of the bushing may be reduced to be as small as possible considering size of the gate. The wall thickness at the front end shall not be less then 2 mm.

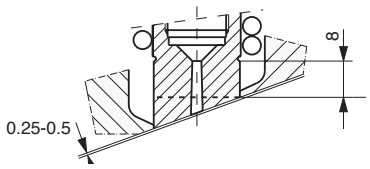

Gate on surface not perpendicular to bush.

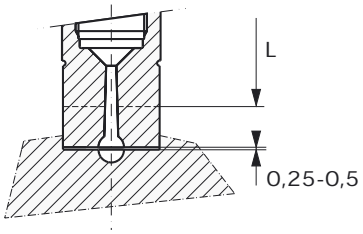

Gate on runner

A small front diameter of the sprue bushing gives:

- less contact area between bushing and mould with a more even temperature along the bushing as a result.
- the force that will push the bushing out of the mould will be reduced.

Size of gate.

On delivery is the gate 2 mm. Outward cone is 1,5° per side. It may be reamed out to 6 mm if necessary.

Shot weight per nozzle grams

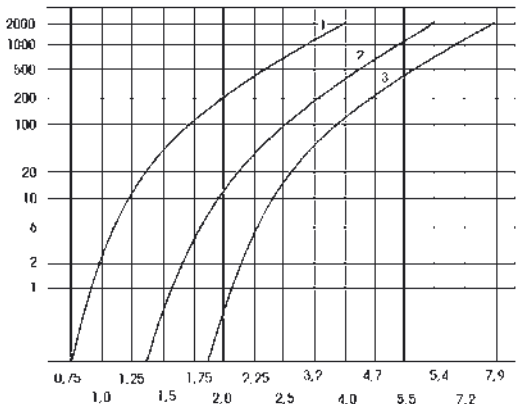

Gate diameter

1. Low viscosity PS, PE, PP.
2. Medium viscosity ABS, SAN, PA, POM.
3. High viscosity PC, PMMA, Noryl, PUR, reinforced plastics.

The diagram above gives a guideline figure for the gate diameter needed for different plastics and shot weights. Note: If the gate diameter is too small, an unnecessarily high bushing temperature will have to be set for the gate not to freeze between shots.
The suggested figures are approximate. Gate dimension may be influenced by the shape of the article and the design of the mould etc.

© LKM Heatlock Co Ltd

This Heatlock series, below, is currently being replaced by the A1-series of nozzles.
Before your design check availability, stock is gradually decreased.
Spare parts will be available until at least end of 2007 (apart form NPT1 bodies)

The balance between shot weight, injection rate, tool temperature, temperature pattern opposite gate, cooling around gate and injection pressure are all factors that affect gate size.A small gate freezes quicker than a large gate.

On injection moulding with very short cycle times and short injection times, it may be necessary to design gate cooling so that it does not overheat.

If the sprue bushing is feeding a runner which has a gate into a cavity, it may be suitable to make bushing gate larger then actually necessary. This way pressure drop and shear will be reduced.

If an electric sprue bushing is used to feeding a runner this means that length of flow in cold steel has been reduced equivalent to bushing length. Due to this cross section of the runner can be made smaller then usually. This may be important in order to get shortest possible cycle time.

Begin with a smaller gate than indicated by the table.

Instructions for changing the coilheater or thermocouple.

Disassembly

1. Take off the reflector (aluminium tube)
2. Unscrew the screws at the rear end.
3. Take off the flange.
4. Take of the lock ring at the front end.
5. Take off the spring that keeps thermocouple in place.
6. Take off the tape that keeps heater and thermocouple extensions together.
7. Depending on how hard spiral heater fits the pipe it can either be pulled of or ”unscrewed”. Unscrewing works easily if you push on the spiral heater extension which will open the spiral while at the same time opening the spiral at the other end with a suitable tool. The thermocouple must not follow if the spiral element is rotated or pulled off, since it may break.Treat thermocouple with great care. The tube is only 1 mm diameter.

Assembly.

To be done in opposite order to disassembly.
If a new thermocouple is to be fitted it must be bent to fit the bushing. The tip of the thermo-couple must be located where the groove ends, i.e. about half-way along the tube. Min. bending radius 3 mm.
Tighten the element so that the heating spiral makes contact with the tube.

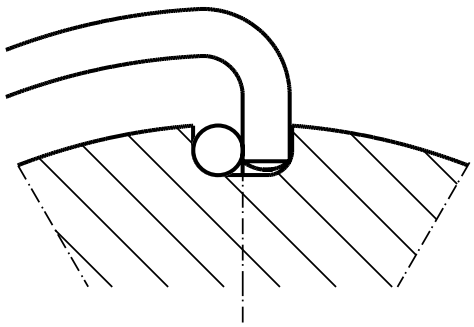

Box 236 S–532 23 Skara
e-mail: hot.runner@heatlock.se
Homepage: http://www.heatlock.se
Phone: +46 511-13200
Fax: +46 511-17285

Date: 050606, © Heatlock AB
© LKM Heatlock Co Ltd

This Heatlock series, below, is currently being replaced by the A1-series of nozzles.
Before you design check availability, stock is gradually decreased.
Spare parts will be available until at least end of 2007 (apart form NPT1 bodies)

HEATLOCK® ESB4..., ELECTRIC SPRUE BUSH

Instructions for instsallation

Max permitted contact force from machine nozzle: 8 Mp..

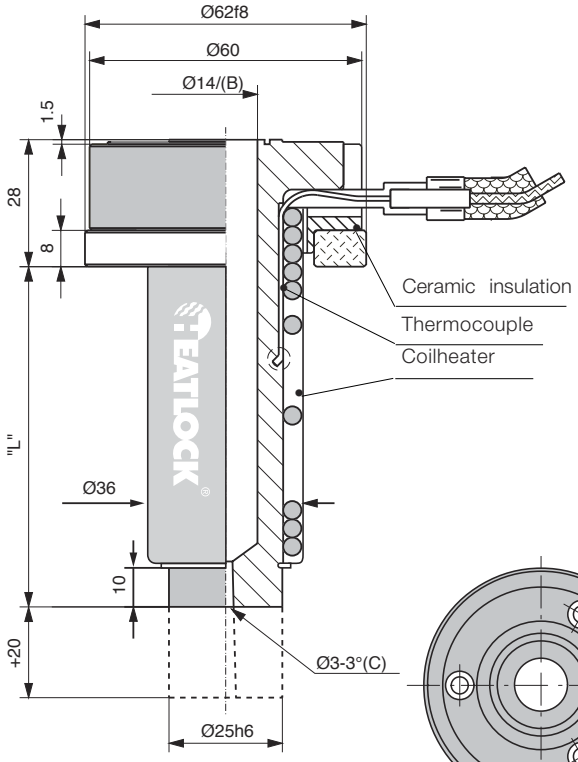

Boring dimensions

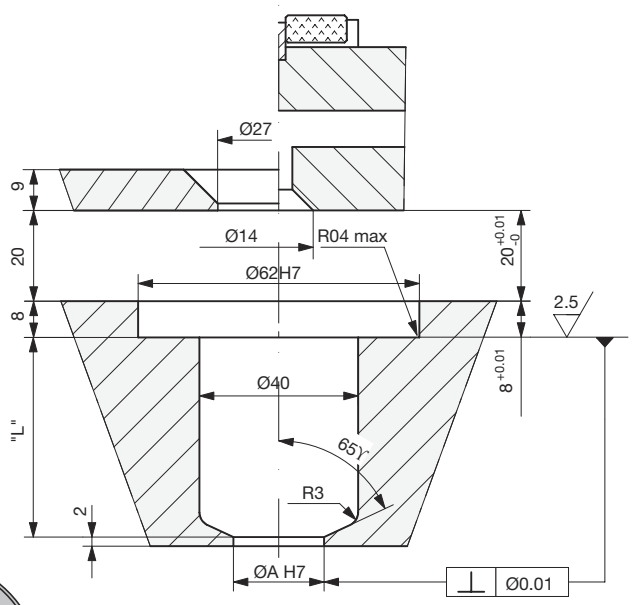

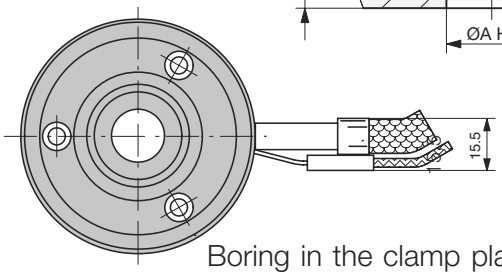

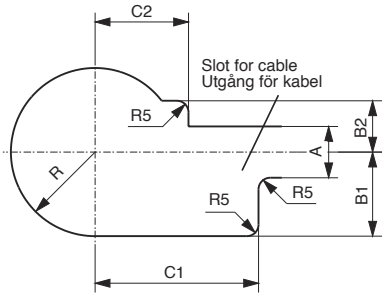

Boring in the clamp plate for the bush with or without bandheater:

Art. nr.	R	A	B1	B2	C1	C2
Bushing	34	20	-	-	-	-
B060020180	42	22	42	22	85	45

When designing the bushing heaters we took every possible step to make the heat distribution along the bushing as even as possible. We have thus concentrated the wattage at both ends in order to compensate for heat losses which are the result of metallic contact between bushing and mould. The ceramic insulation is of course also highly important for uniform temperature distribution in the bushing.

When temperatures of 250–260 ºC and above are needed it may be advantageous to install a heater band at the back end. This is also the case when shearsensitive materials are to be moulded.

Note: This element must be connected to its own special manual controller and must not be connected in parallel with the spiral element and its thermocouple.

If the bushing is installed as shown in the diagram, all cables will be protected from plastic.

If possible there shall be no contact between the back end of the bushing and the guide ring of the mould. Such contact will cause a heavy drop in temperature at the back end of the bushing. If the force at which the machine nozzle is pressed against the sprue bushing is greater then that caused by the injection force on the front area of the bushing, nothing is needed to keep bushing in place axially. The bushing can then be installed as shown in the diagram on the next page.

Max permitted contact force from machine nozzle: 8 Mp.
If a support is needed to fix the bushing axially the contact area must be as small as possible. The support area should preferably be as far as possible from the centre of the bushing. (Not on the flange.) Preferably an insulation ring part No. KE06003908 shall be placed between the back support and the surface of the bushing.

Single-cavity Multi-cavity

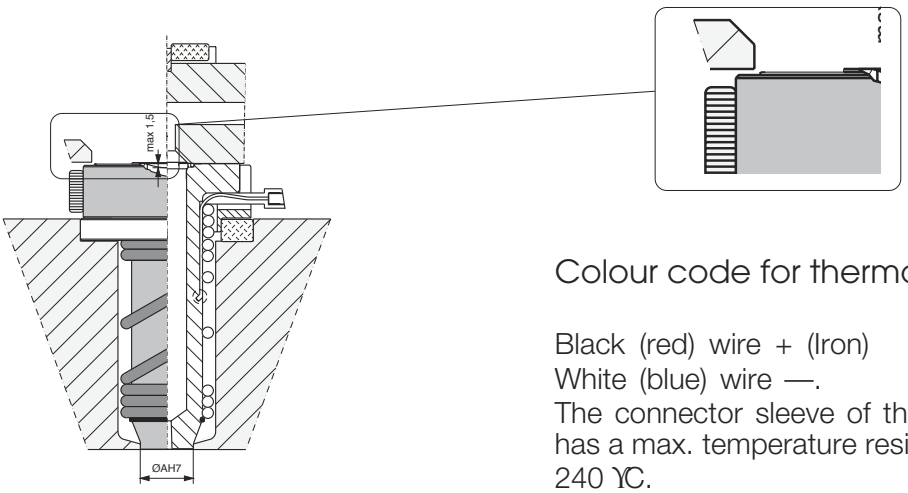

Colour code for thermocouple wires.

Black (red) wire + (Iron)
White (blue) wire —.
The connector sleeve of the thermocouple has a max. temperature resistance of 240 ºC.

Fitting of the front end of the bushing.

A certain amount of cooling is needed at front end. It must remain at a temperature low enough to make the plastic solidify. Too much cooling will however cause the plastic in the flow channel to be highly viscous further into the bushing.

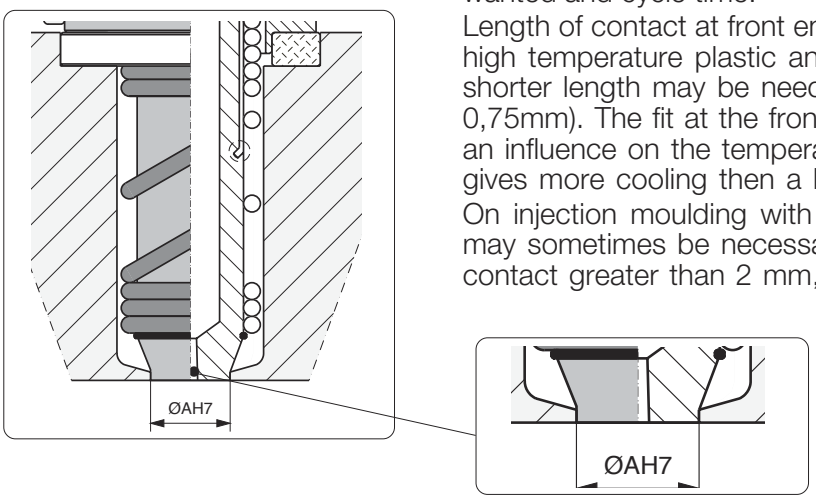

The contact surface at the front end may therefore have to be trimmed depending on, for example, temperature wanted and cycle time.
Length of contact at front end can usually be 2mm. For high temperature plastic and for long cycle time a shorter length may be needed (down to about 0,75mm). The fit at the front end in the mould also has an influence on the temperature at that area. A hard fit gives more cooling then a loose one.
On injection moulding with fast-injecting materials it may sometimes be necessary to have a length of contact greater than 2 mm, so that sufficient heat can be carried away from the front face. This may mean increasing the temperature of the bushing during startup and reducing it in continuous operation.
Front diameter of the bushing (A) may be reduced to be as small as possible considering size of the gate. The wall thickness at the front end shall not be less then 2,5 mm.
A small front diameter of the sprue bushing gives:

- less contact area between bushing and mould with a more even temperature along the bushing as a result.
- the force that will push the bushing out of the mould will be reduced.

Length of the bushing.

When fitting the bushing into the mould it is essential to bear in mind that its length increases when it gets hot. Approx. elongation of bushing at 200 ºC

L=75 approx 0,19 mm
L=100approx 0,24 mm
L=125approx 0,30 mm
L=150approx 0,35 mm

Date: 050326, © Heatlock AB
© LKM Heatlock Co Ltd

Bushings with extra stock must be used when any kind of contour is needed at the front end. This is how it should be done.

Do not go below the L-dimension of the bushing when machining.
The front surface of the bushing must not come into contact with the moving mould half.

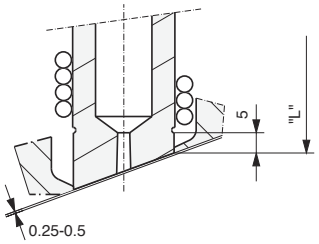

Gate on surface not perpendicular to bush

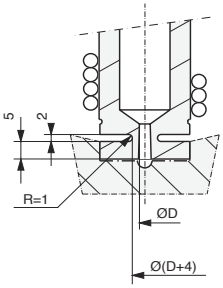

Gate on runner

Bushings for multi-cavity version

If the rear end of the bushing is to be in contact with a manifold, machine an O-ring groove in that part, as shown on the right.

Art. number ORING00615

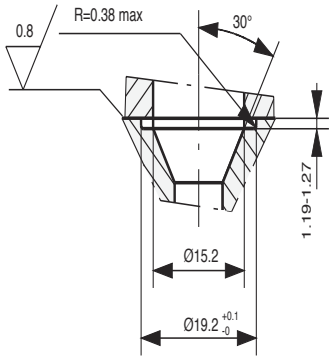

Size of gate.

On delivery the gate is 3 mm. Outward cone is 1,5ϒ per side. It may be reamed out to 10 mm if necessary.

Shot weight per nozzle in grams

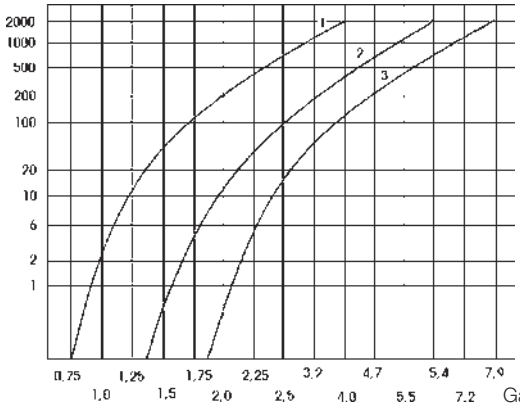

1. Low viscosity (PS, PE, PP).
2. Medium viscosity (ABS, SAN, PA, POM).
3. High viscosity (PC, PMMA, Noryl, PUR, reinforced plastics).

The diagram on the next page gives a guideline figure for the gate diameter needed for different plastics and shot weights. Note: If the gate diameter is too small, an unnecessarily high bushing temperature will have to be set for the gate not to freeze between shots.

The suggested figures are approximate. Gate dimensions may be influenced by the shape of the article and the design of the mould etc.
The balance between shot weight, injection rate, tool temperature, temperature pattern opposite gate, cooling around gate and injection pressure are all factors that affect gate size.
If the sprue bushing is feeding a runner which has a gate into a cavity, it may be suitable to make bushing gate larger then actually necessary. This way pressure drop and shear will be reduced.
If an electric sprue bushing is used to feeding a runner this means that length of flow in cold steel has been reduced equivalent to bushing length. Due to this cross section of the runner can be made smaller then usually. This may be important in order to get shortest possible cycle time.
Begin with a smaller gate than indicated by the table.

This Heatlock series, below, is currently being replaced by the A1-series of nozzles.
Before you design check availability, stock is gradually decreased.
Spare parts will be available until at least end of 2007 (apart form NPT1 bodies)

Modification of large sprue bush for pin point gating.

1.Machine main body at front end to a tatal length of 99 resp. 124, 149 and 174 mm. The complete, modified bushing will have the following L=lengths:

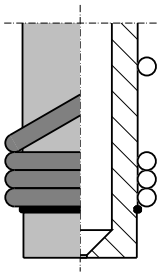

Part.no ESB4075201 71mm
ESB4100201 96 mm
ESB4125201 121 mm
ESB4150201 146 mm

2. Spark erode the centre hole as shown above, until 0,6mm is left to the front end.

3.After spark erosion, the tube should be stress-annealed at about 300 ºC.

4. Because of the hole that already exists in the sprue bushing, the gate hole of the modified version will be about 3.3 mm, which is a suitable size for approximately the following shot weights:

low-viscosity plastics 1000 g, medium-viscosity 200g, high-viscosity 40 g

If a larger shot capacity is needed, increase the gate hole to a suitable diameter.

Instructions for changing the coilheater or thermocouple.

Disassembly

1. Unscrew the screws at the rear end.
2. Remove the flange.
3. Take of the lock ring at the front end
4. Take off the spring that keeps thermocouple in place.
5. Take off the tape that keeps heater and thermocouple extensions together.
6. Depending on how hard spiral heater fits the pipe it can either be pulled off or ”unscrewed”. Unscrewing works easily if you push on the spiral heater extension which will open the spiral while at the same time opening the spiral at the other end with a suitable tool. The thermocouple must not follow if the spiral element is rotated or pulled off, since it may break.
   Treat thermocouple with great care. The tube is only 1 mm diameter.

Assembly.

To be done in opposite order to disassembly.
If a new thermocouple is to be fitted it must be bent to fit the bushing. The tip of the thermocouple must be located where the groove ends, i.e. about half-way along the tube. Min. bending radius 3 mm.

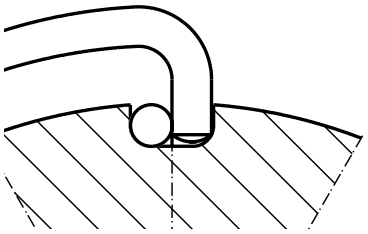

Tighten the element so that the heating spiral makes contact with the tube.

If you have any questions about installing the bushing, please get in touch with us.

HEATLOCK®
Box 236 S–532 23 Skara
e-mail: hot.runner@heatlock.se
Homepage: http://www.heatlock.se
Phone: +46 511-13200
Fax: +46 511-17285

Heatlock AB 97.06 / ESB4.mont

Date: 050326, © Heatlock AB
© LKM Heatlock Co Ltd

This Heatlock series, below, is currently being replaced by the A1-series of nozzles.
Before you design check availability, stock is gradually decreased.
Spare parts will be available until at least end of 2007 (apart form NPT1 bodies)

PPB2..., Pin Point bush

Instructions for installations.

Max permitted contact force from machine nozzle: 4 Mp.

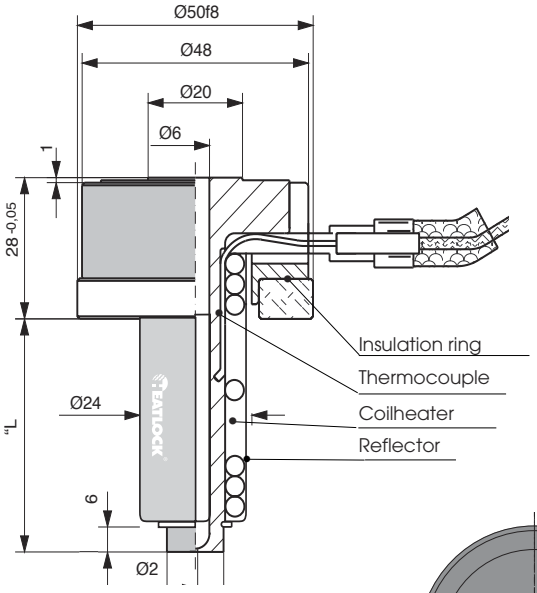

Boring dimensions

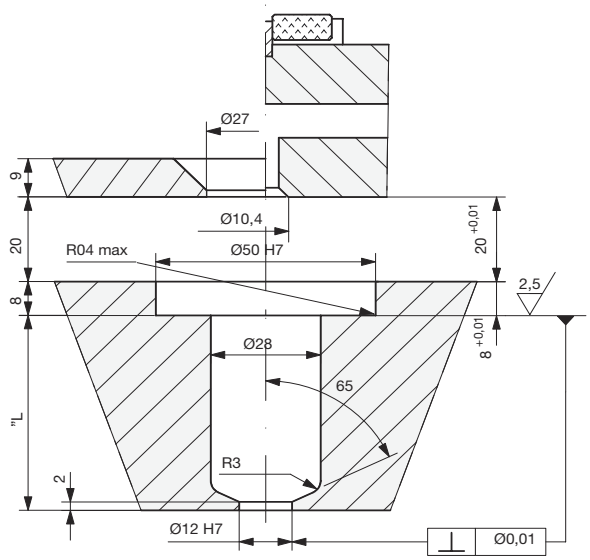

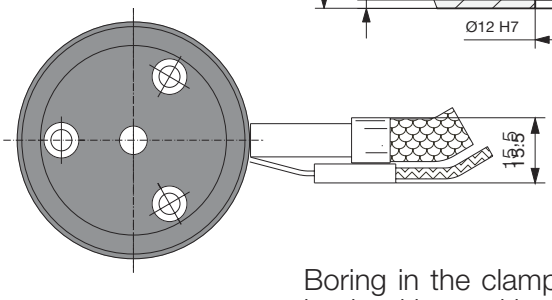

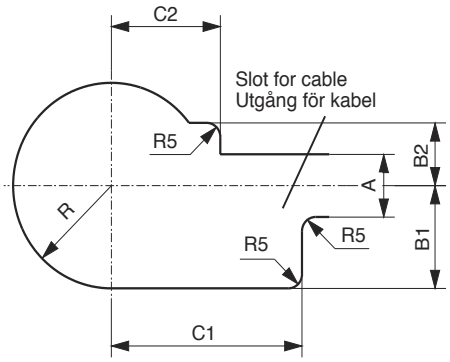

Boring in the clamp plate for the bush with or without bandheater:

Art. nr.	R	A	B1	B2	C1	C2
Bushing	28	20	-	-	-	-
B047015315	36	22	15	22	45	45
B048020180	36	22	36	22	70	40

When designing the bushing heaters we took every possible step to make the heat distribution along the bushing as even as possible. We have thus concentrated the wattage at both ends in order to compensate for heat losses which are the result of metallic contact between bushing and mould. The ceramic insulation is of course also highly important for uniform temperature distribution in the bushing.

When temperatures of 250–260 ºC and above are needed it may be advantageous to install a heater band at the back end. This is also the case when shearsensitive materials are to be moulded.

Note: This element must be connected to its own special manual controller and must not be connected in parallel with the spiral element and its thermocouple.

This Heatlock series, below, is currently being replaced by the A1-series of nozzles.
Before your design check availability, stock is gradually decreased.
Spare parts will be available until at least end of 2007 (apart form NPT1 bodies)

If the bushing is installed as shown in the diagram, all cables will be protected from plastic.
If possible there shall be no contact between the back end of the bushing and the guide ring of the mould. Such contact will cause a heavy drop in temperature at the back end of the bushing. If the force at which the machine nozzle is pressed against the sprue bushing is greater then that caused by the injection force on the front area of the bushing, nothing is needed to keep bushing in place axially. The bushing can then be installed as shown in the

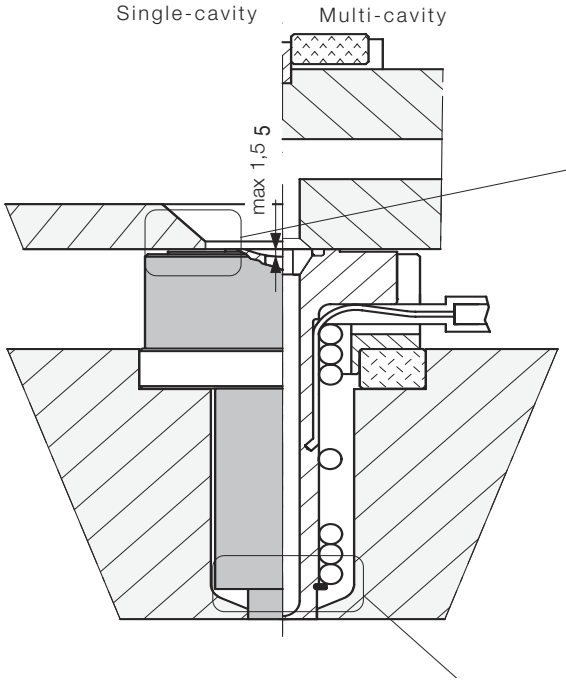

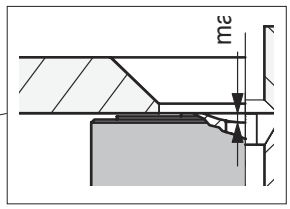

diagram below. Max permitted contact force from machine nozzle: 4 Mp.
If a support is needed to fix the bushing axially the contact area must be as small as possible. The support area should preferably be as far as possible from the centre of the bushing. (Not on the flange.)
Preferably an insulation ring part No. KE05002708 shall be placed between the back support and the surface of the bushing.

Colour code for thermocouple wires.

Black (red) wire + (Iron) White (blue) wire —.

The connector sleeve of the thermocouple has a max. temperature resistance of 240 ºC.

Fitting of the front end of the bushing.

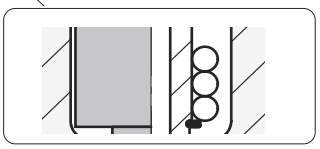

A certain amount of cooling is needed at front end. It must remain at a temperature low enough to make the plastic solidify. Too much cooling will however cause the plastic in the flow channel to be highly viscous further into the bushing.
The contact surface at the front end may therefore have to be trimmed depending on, for example, temperature wanted and cycle time.
Length of contact at front end can usually be 2mm. For high temperature plastic and for long cycle time a shorter length may be needed (down to about 0,75mm). The fit at the front end in the mould also has an influence on the temperature at that area. A hard fit gives more cooling then a loose one.
On injection moulding with fast-injecting materials it may sometimes be necessary to have a length of contact greater than 2 mm, so that sufficient heat can be carried away from the front face. This may mean increasing the temperature of the bushing during startup and reducing it in continuous operation.

Length of the bushing.

When fitting the bushing into the mould it is essential to bear in mind that its length increases when it get hot. Approx. elongation of bushing at 200 ºC

L26	approx 0,10 mm
L46	approx 0,17 mm
L66	approx 0,22 mm
L86	approx 0,27 mm

Date: 050606, © Heatlock AB
© LKM Heatlock Co Ltd

Size of gate.

On delivery is the gate 1 mm. Outward cone is 3ϒ per side.
When enlarging the gate, use as a starting point the hole that exists when you centre the bushing.

Shotweight per nozzle in grams

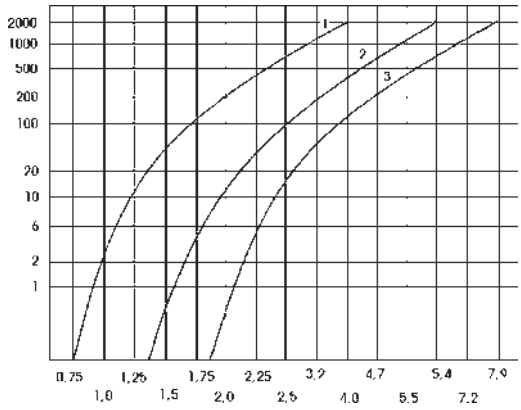

Gate diameter

1. Low viscosity (PS, PE, PP).
2. Medium viscosity (ABS, SAN, PA, POM).
3. High viscosity (PC, PMMA, Noryl, PUR, reinforced plastics).

The diagram gives guideline figures for the gate diameter needed for different plastics and shot weights.
Note: If the gate diameter is too small, an unnecessarily high bushing temperature will have to be set for the gate not to freeze between shots.

Land length of gate.

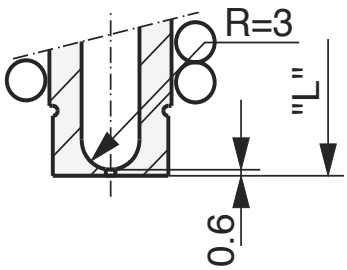

With 1 mm gate diameter the length of the gate in the bushing is 0.6 mm. Owing to the shape of the internal flow channel at the gate hole, the length of the gate will increase when the diameter is increased. As a consequence of this the length of the gate residue will also increase.

Gate diameter	Reduce length with
1,5 mm	0,06
2,0	0,13
2,5	0,23
3,0	0,36
3,5	0,52

If it is particularly important that the gate residue should be as short as possible, the gate length can be reduced by grinding away material from the front surface of the bushing. For minimum gate residue length, the length of the bushing can be reduced as shown for the stated diameters.

If the bushing length is reduced as above, this must be taken into account when installing the bushing, otherwise the front plane of the bushing will be below the mould surface.

This Heatlock series, below, is currently being replaced by the A1-series of nozzles.
Before you design check availability, stock is gradually decreased.
Spare parts will be available until at least end of 2007 (apart form NPT1 bodies)

Instructions for changing the coilheater or thermocouple.

Disassembly

1. Take off the reflector (aluminium tube)
2. Unscrew the screws at the rear end.
3. Take off the flange.
4. Take of the lock ring at the front end.
5. Take off the spring that keeps thermocouple in place.
6. Take off the tape that keeps heater and thermocouple extensions together.
7. Depending on how hard spiral heater fits the pipe it can either be pulled of or ”unscrewed”. Unscrewing works easily if you push on the spiral heater extension which will open the spiral while at the same time opening the spiral at the other end with a suitable tool. The thermocouple must not follow if the spiral element is rotated or pulled off, since it may break.Treat thermocouple with great care. The tube is only 1 mm diameter.

Assembly.

To be done in opposite order to disassembly.
If a new thermocouple is to be fitted it must be bent to fit the bushing. The tip of the thermocouple must be located where the groove ends, i.e. about half-way along the tube.
Min. bending radius 3 mm.
Tighten the element so that the heating spiral makes contact with the tube.

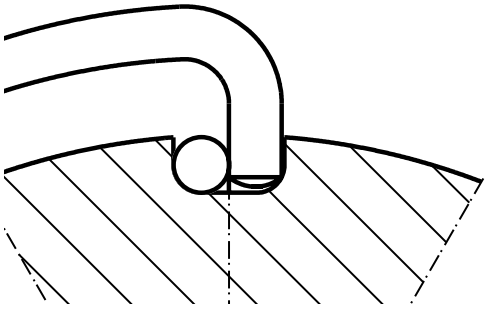

If you have any questions about installing the bushing, please get in touch with us.

PPB2

Box 236 S–532 23 Skara
e-mail: hot.runner@heatlock.se
Homepage: http://www.heatlock.se
Phone: +46 511-13200
Fax: +46 511-17285

Heatlock AB 97.06 / PPB2.mont

Date: 050606, © Heatlock AB
© LKM Heatlock Co Ltd

This Heatlock series, below, is currently being replaced by the A1-series of nozzles.
Before you design check availability, stock is gradually decreased.
Spare parts will be available until at least end of 2007 (apart form NPT1 bodies)

HEATLOCK® PPB3..., PIN POINT BUSH

Instructions for installations.

Max permitted contact force from machine nozzle: 4 Mp.

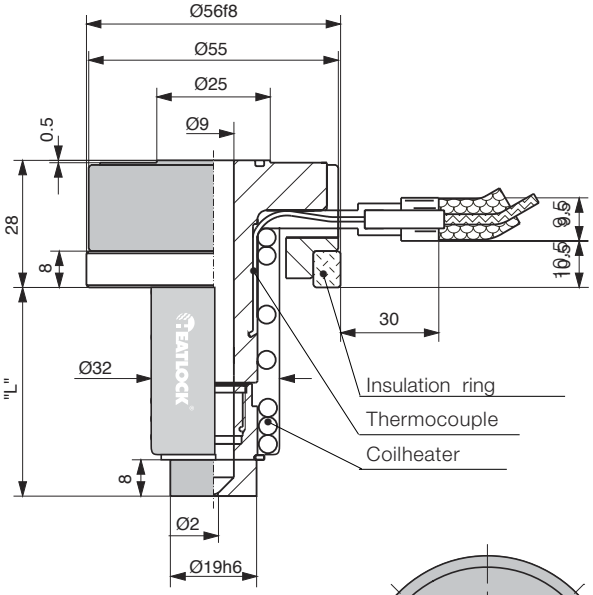

Boring dimensions

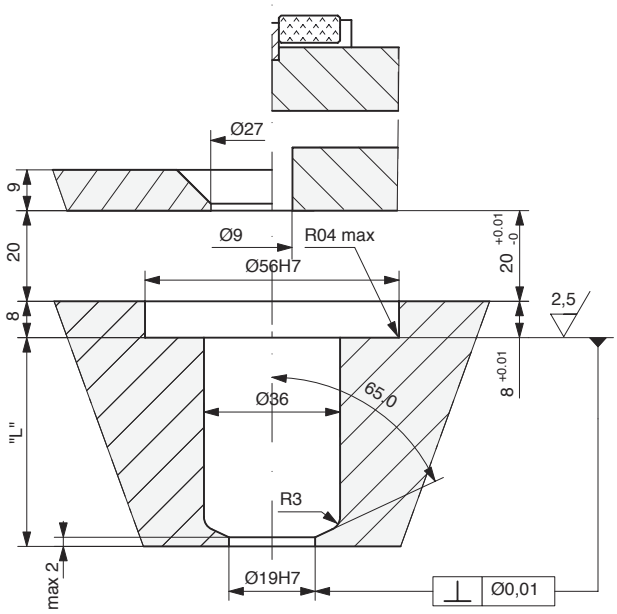

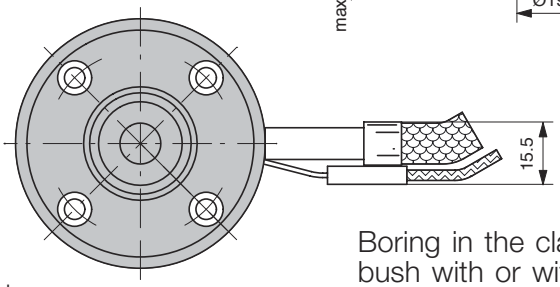

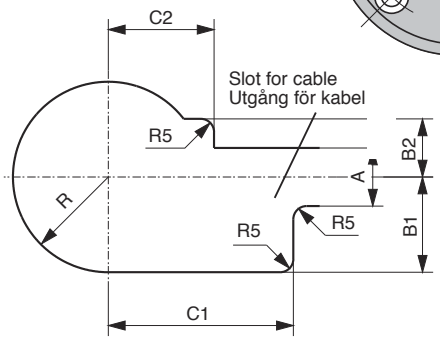

Boring in the clamp plate for the bush with or without bandheater:

Art. nr.	R	A	B1	B2	C1	C2
Bushing	28	22	-	-	-	-
B055020180	40	22	42	22	85	45

When designing the bushing heaters we took every possible step to make the heat distribution along the bushing as even as possible. We have thus concentrated the wattage at both ends in order to compensate for heat losses which are the result of metallic contact between bushing and mould. The ceramic insulation is of course also highly important for uniform temperature distribution in the bushing.

When temperatures of 250–260 ºC and above are needed it may be advantageous to install a heater band at the back end. This is also the case when shearsensitive materials are to be moulded.

Note: This element must be connected to its own special manual controller and must not be connected in parallel with the spiral element and its thermocouple.

If the bushing is installed as shown in the diagram, all cables will be protected from plastic. If possible there shall be no contact between the back end of the bushing and the guide ring of the mould. Such contact will cause a heavy drop in temperature at the back end of the bushing. If the force at which the machine nozzle is pressed against the sprue bushing is greater then that caused by the injection force on the front area of the bushing, nothing is needed to keep bushing in place axially. The bushing can then be installed as shown in the diagram below. Max permitted contact

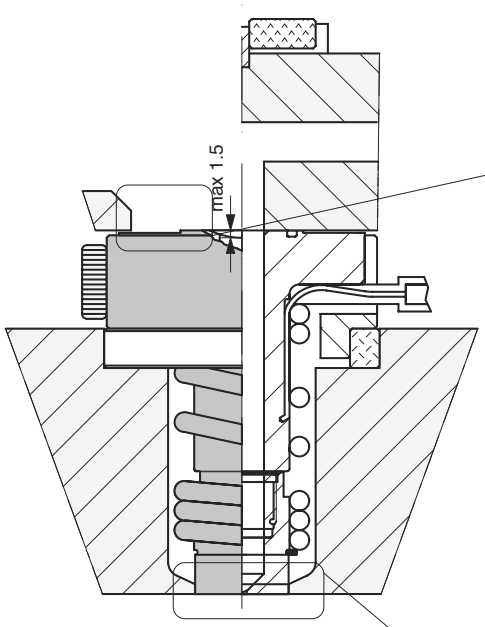

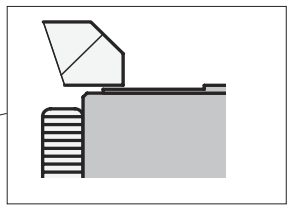

force from machine nozzle: 4 Mp.
If a support is needed to fix the bushing axially the contact area must be as small as possible. The support area should preferably be as far as possible from the centre of the bushing. (Not on the flange.)
Preferably an insulation ring part No. KE05604408 shall be placed between the back support and the surface of the bushing.

Colour code for thermocouple wires.

Black (red) wire + (Iron) Vit (blue) wire —.

The connector sleeve of the thermocouple has a max. temperature resistance of 240 ºC.

Fitting of the front end of the bushing.

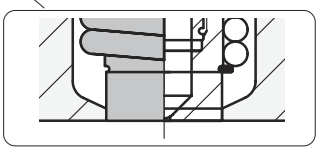

A certain amount of cooling is needed at front end. It must remain at a temperature low enough to make the plastic solidify. Too much cooling will however cause the plastic in the flow channel to be highly viscous further into the bushing.
The contact surface at the front end may therefore have to be trimmed depending on, for example, temperature wanted and cycle time.
Length of contact at front end can usually be 2mm. For high temperature plastic and for long cycle time a shorter length may be needed (down to about 0,75mm). The fit at the front end in the mould also has an influence on the temperature at that area. A hard fit gives more cooling then a loose one.
On injection moulding with fast-injecting materials it may sometimes be necessary to have a length of contact greater than 2 mm, so that sufficient heat can be carried away from the front face. This may mean increasing the temperature of the bushing during startup and reducing it in continuous operation.

Length of the bushing.

When fitting the bushing into the mould it is essential to bear in mind that its length increases when it get hot. Approx. elongation of bushing at 200 ºC

L46	approx. 0,10 mm
L66	approx. 0,17 mm
L86	approx. 0,22 mm
L116	approx. 0,27 mm
L146	approx. 0,38 mm
L176	approx. 0,46 mm

Date: 050326, © Heatlock AB
© LKM Heatlock Co Ltd

Size of gate.

On delivery is the gate 1 mm. Outward cone is 3Υ per side.
When enlarging the gate, use as a starting point the hole that exists when you centre the bushing.

Shotweight per nozzle in grams

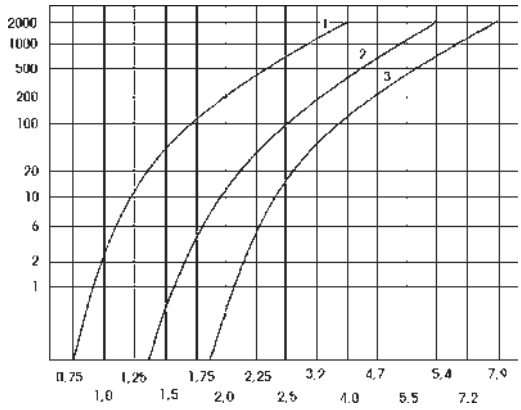

Gate diameter

1. Low viscosity (PS, PE, PP).
2. Medium viscosity (ABS, SAN, PA, POM).
3. High viscosity (PC, PMMA, Noryl, PUR, reinforced plastics).

The diagram gives guideline figures for the gate diameter needed for different plastics and shot weights.
Note: If the gate diameter is too small, an unnecessarily high bushing temperature will have to be set for the gate not to freeze between shots.

Land length of gate.

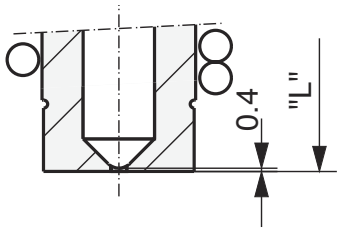

With 1 mm gate diameter the length of the gate in the bushing is 0.6 mm. Owing to the shape of the internal flow channel at the gate hole, the length of the gate will increase when the diameter is increased. As a consequence of this the length of the gate residue will also increase.

If it is particularly important that the gate residue should be as short as possible, the gate length can be reduced by grinding away material from the front surface of the bushing. For minimum gate residue length, the length of the bushing can be reduced as shown for the stated diameters.

Gate diameter	Reduce length with
1,5 mm	0,06
2,0	0,13
2,5	0,23
3,0	0,36
3,5	0,52

If the bushing length is reduced as above, this must be taken into account when installing the bushing, otherwise the front plane of the bushing will be below the mould surface.

This Heatlock series, below, is currently being replaced by the A1-series of nozzles.
Before you design check availability, stock is gradually decreased.
Spare parts will be available until at least end of 2007 (apart form NPT1 bodies)

Instructions for changing the coilheater or thermocouple.

Disassembly

1. Take off the reflector (aluminium tube)
2. Unscrew the screws at the rear end.
3. Take off the flange.
4. Take of the lock ring at the front end.
5. Take off the spring that keeps thermocouple in place.
6. Take off the tape that keeps heater and thermocouple extensions together.
7. Depending on how hard spiral heater fits the pipe it can either be pulled of or ”unscrewed”. Unscrewing works easily if you push on the spiral heater extension which will open the spiral while at the same time opening the spiral at the other end with a suitable tool. The thermocouple must not follow if the spiral element is rotated or pulled off, since it may break.Treat thermocouple with great care. The tube is only 1 mm diameter.

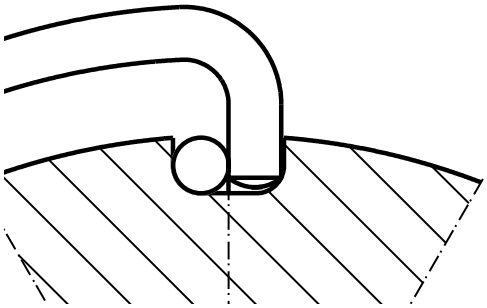

Assembly.

To be done in opposite order to disassembly.
If a new thermocouple is to be fitted it must be bent to fit the bushing. The tip of the thermocouple must be located where the groove ends, i.e. about half-way along the tube. Min. bending radius 3 mm.
Tighten the element so that the heating spiral makes contact with the tube.

If you have any questions about installing the bushing, please get in touch with us.

PPB3

Box 236 S–532 23 Skara
e-mail: hot.runner@heatlock.se
Homepage: http://www.heatlock.se
Phone: +46 511-13200
Fax: +46 511-17285

Heatlock AB 97.06 / PPB3.mont

Date: 050326, © Heatlock AB
© LKM Heatlock Co Ltd

This Heatlock series, below, is currently being replaced by the A1-series of nozzles.
Before you design check availability, stock is gradually decreased.
Spare parts will be available until at least end of 2007 (apart form NPT1 bodies)

Montering av balk / Manifold Assembly / Einbau des Verteilerbalkens

svenska

Kontrollera följande innan varmkanalsbalken monteras slutgiltigt (se översikten på vänster sida):

1. Justera in all keramik , isolering för varje bussning så att samtliga ligger på samma nivå som Plan "B".
2. Sätt dit bussningarna och kontrollera att bussningarna / torpedernas bakre plan ligger inom samm höjd, 0,01 mm, enligt mätvärdesnivå "C". Använd tre mätpukter på respektive bussning.
3. Sätt ihop keramiken KEM03001017 med stödet DSP0353010, mät upp totalhöjden, (ca.24mm). Mät upp och minska denna höjd med det förborrade djupet för keramiken i varmkanalbalken, (ca. 2 mm) samt det uppmätta måttet mellan plan "C" och plan "B" (ca. 15,5 eller 20 mm beroende på bussning), återstående ca 6,5 eller 2 mm försänkes i formplattan. Viktigt är att varmkanalbalken ligger i samma nivå som bussningarna och inte glappar eller "rullar" under centrumstödet.
4. Om varmkanalbalken skall bultas fast kontrollera då att hålbilden i balken överenstämmer med hålbilden i formplattan.
5. Sätt ihop det bakre keramiken KE02500305 med stödet DSP0300306 / DSP0300312, försäkra Dig om att keramiken bottnar i stödet. Mät upp och kontrollera höjden på samtliga enheter. Om eventuell avikelse förekommer , slipa in samtliga till samma höjd, inom 0.005mm, slipa på stödets undersida. Fixera sedan denna enhet med stift DW03X12 i de förborrade hålen i balken. Korrigera även här luftspalten som skall råda i kallt tillstånd som krävs för värmeexpandering i enlighet med *tabell 1.* Plan "D".
6. Lägg varmkanalbalken på ingötsbussningarna, som centreras i centrumstödet KEM03001017. Vridfixeringen görs med hjälp av en Cylindrisk Pinne som placeras i det förfrästa spåret i balken. Detta görs utan att O-ringarna är monterade.
7. Skruva fast varmkanalbalken med avsedda skruvar om balken skall bultas fast, kontrollera även att samtliga kablar är fria.
8. Kontrollera här nivån på de bakre stödens ovansida -plan "D", samtliga skall nu ligga inom 0.005 mm.
9. Ta av balken montera samtliga O-ringar, återmontera och kontrollera att det inte finns några ledningar i kläm eller som ligger an mot varmkanalbalken.
10. Kontrollera att varmkanalbalken är tillbaka till rätt nivå / höjd från mätvärdesnivå "D". Om varmkanalbalken inte är fastskruvad monteras fästplattan och dras fast så att O-ringarna pressas samman innan denna kontroll genomförs. Värm upp systemet till drifttemperatur innan fästplattan tas bort för den sista kontrollen.

Bänkprovet är viktigt. Det visar om de elektriska komponenterna och ledningsdragningen fungerar. Ju fler delar du vet fungerar till 100 %, desto bättre.

english

Check the following before the manifold is finally assembled (see overview on the left side):

1. Adjust all the ceramics, insulation for each bushing so that they are all at the same level as Plan "B".
2. Put in the bushings and check that the bushings / torpedoes rear plane is at the same height, 0,01 mm, according to the measurement level "C". Use three measuring points in each bushing.
3. Assemble the ceramic KEM03001017 with the support DSP0353010, measure the total height (approx.24mm). Measure and reduce this height by the pre-bored depth of the ceramic in the manifold, (approx. 2 mm) and the measured distance between plane "C" and plane "B" (approx. 15,5 or 20 mm depending on the bushing), the remaining 6,5 or 2 mm is countersunk in the form plate. It is important that the manifold is at the same level as the bushings and don't have too much play or "roll" under the central support.
4. If the manifold is to be bolted check that the shape of the hole in the manifold matches the hole shape in the cavity plate.
5. Assemble the back support KE02500305 with the support DSP0300306 / DSP0300312, make sure that the ceramic reaches the bottom of the support. Measure and check the height of all the units. If there are any discrepancies, adjust all to the same height within 0.005 mm, work with the underside of the support. Fix this with dowel DW03X12 in the pre-bored holes in the manifold. Correct here for the air gap which there shall be in cold condition to allow for heat expansion according to *table 1.* plane "D".
6. Put the manifold on the bushings, which is centred using the ceramic center support KEM03001017. Torsion fixing is done with the help of dowels which are placed in the pre-milled slot in the manifold. This is done without the O-rings mounted.
7. Tighten the manifold with the screws provided if the manifold is to be bolted, check that all the cables are free.
8. Check the level of the upper part of the rear support plane "D", they shall all be within 0.005 mm.
9. Take off the manifold, assemble all the O-rings, re-assemble and check that there are no trapped cables or cables laying against the manifold.
10. Check that the manifold is back at the right level/height from the measurement level "D". If the manifold isn't fixed the fixing plate is mounted and tightened so that the O-rings are pressed together before the control is carried out. Heat up to running temperature before the clamp plate is removed for the final check.

Bench testing is important. It proves the electrics and wiring. The more areas that you know are working 100% the better.

deutsch

Vor dem endgültigen Einbau der Heißkanalplatte muss Folgendes beachtet werden (siehe links):

1. Justieren Sie die keramische Zentrierung, die Isolierung jeder Düse so, dass sämtliche auf der gleichen Ebene, wie in der Abb. unter "B" angegeben, liegen.
2. Bringen Sie die Düsen an und kontrollieren Sie, dass der hintere Teil der Düsen/Torpedos innerhalb der gleichen Höhe , 0,01 mm, laut Messwertstufe "C", liegt. Bedienen Sie sich dreier Messpunkte an der entsprechenden Düse.
3. Einbau der keramischen Zentrierung KEM03001017 mit Zentrierhülse DSP0353010 und Messen der Gesamthöhe (ca 24 mm):
   Messen und vermindern Sie die Höhe mit den vorgebohrten Durchgängen für die keramische Zentrierhülse an der Heißkanalplatte, (ca 2 mm) sowie den Messwert zwischen Stufe "C" und "B" (ca 15,5 oder 20 mm je nach Wahl der Düse). Die verbleibenden ca 6,5 oder 2 mm werden in die Formplatte versenkt. Wichtig dabei ist, dass die Heißkanalplatte auf gleicher Ebene wie die Düsen liegt und nicht schleudern oder schlingern darf.
4. Wenn die Heißkanalplatte verbolzt werden soll, ist darauf zu achten, dass die Durchgangs- und Gewindebohrungen im Verteilerbalken mit der der Formplatte genau übereinstimmen.
5. Verbinden Sie den hinteren keramischen Stützring KEM02500305 mit der hinteren Hülse DSP0300306/ DSP0300312, vergewissern Sie sich, dass Sie richtig eingesetzt ist. Vermessen und kontrollieren Sie die Höhen an sämtlichen Einheiten. Sollten eventuelle Abweichungen vorkommen, korriegieren Sie diese durch Abschleifen auf die gleiche Höhe, innerhalb einer Toleranz von 0.005 mm, schleifen Sie die Unterseite der Hülse. Fixieren Sie anschliebend diese Einheit mit dem Stift DW03X12 in die vorgebohrten Durchgänge am Verteiler. Korrigieren Sie auch hier den Luftspalt im kalten Zustand zum Zwecke der Wärmeausdehnung. Vgl. *Tabelle 1.* "D".
6. Legen Sie die Heißkanalplatte auf die Eingussdüsen, die in der keramischen Zentrierung KEM03001017 zentriert werden. Die Drehfixierung geschieht mit Hilfe eines zylindrischen Stiftes, der an der vorgefrästen Nute am Verteiler angebracht wird. Dieser Vorgang wird ohne das Vorhandensein von O-Ringen durchgeführt.
7. Schrauben Sie den Verteilerbalken, falls die Platte verschraubt werden soll, mit den vorgesehenen Schrauben fest. Überprüfen Sie, dass sämtliche Leitungen freigelegt sind.
8. Kontrollieren Sie die Werte der Oberseite der hinteren keramischen Stützscheibe (vgl. "D"). Die Toleranzgrenze von 0,005 mm darf nicht überschritten werden.
9. Nehmen Sie den Verteiler ab, legen Sie sämtliche 0-Ringe an, bringen Sie den Verteiler wieder an und versichern Sie sich, dass keine Leitungen eingeklemmt sind oder an der Heißkanalplatte anliegen.
10. Überprüfen Sie, dass sich die Heißkanalplatte, vom Ausgangswert "D" aus, wieder auf der richtigen Höhenstufe befindet. Falls die Heißkanalplatte noch nicht angeschraubt ist, wird die Befestigungsplatte montiert und fest angezogen, so dass die O-Ringe zusammengepresst werden, bevor die Prüfung durchgeführt wird. Erwärmen Sie das System auf Betriebstemperatur, bevor die Befestigungsplatte zur letzten Kontrolle entfernt wird.

Eine Endabnahme ist notwendig und wichtig. Sie garantiert die Richtigkeit der Funktionen aller elektrischen Komponenten und Leitungen. Je mehr Sie sich von der 100%ige Funktionstauglichkeit der Teile überzeugen, desto erfolgreicher die Arbeit.

HEATLOCK® NPT1 / NPT1-Xtnd

Art. Nr: CAI-NPT1 Rev:01

6

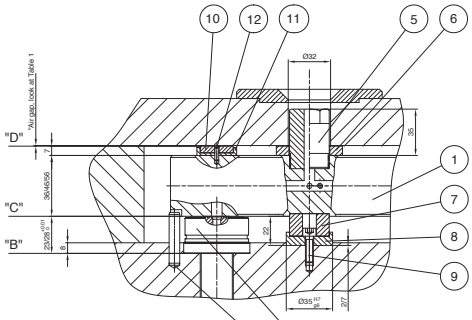

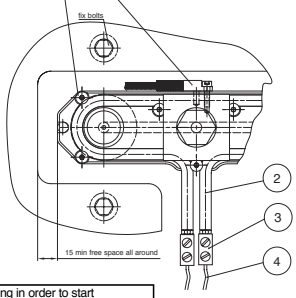

Table 1 / tabell 1 / Tabelle 1

Heat expansion			
°C	T=36	T=46	T=56
200	0,08	0,10	0,13
250	0,10	0,13	0,16
300	0,12	0,16	0,20
350	0,14	0,18	0,23

Item	Qty	Art. Nr.	Description
31	1	HEATMANPROOF	Proof of drawing in order to start
30	1	HEATMANDOC	Documentation of the Hot-Runner System
20	2	ESB2046102	Sprue Bush, Series 2, L=46 mm
15	1	DW08X40	Dowell Ø8x40
14	1	TC00040180	Thermocouple, L=12
13	14	MF6S08X008	Screw M5x8
12	2	DW03X12	Dowell Ø3x12
11	2	DSP0300306	Back Spacer
10	2	KE02500305	Ceramic Back Support
9	1	CS06020	Screw M6x20
8	1	DSP0353010	Center Location spacer
7	1	KEM03001017	Ceramic Center Spacer
6	1	DSPP503107	Purge Guard
5	1	DSP4503008	Feedbush
4	4	MHWIRE050	Wire
3	4	MHCONN001	Ceramic Connector
2	2	MHI02400	Tubular Heater
1	1	MI2400004608	Standard Manifold, CC=240mm, Feed=Ø8 mm

© LKM Heatlock Co Ltd

This Heatlock series, below, is currently being replaced by the A1-series of nozzles.
Before you design check availability, stock is gradually decreased.
Spare parts will be available until at least end of 2007 (apart form NPT1 bodies)

SE Anvisning för inbyggnad.
Max. tillåten anläggningskraft från maskinmunstycke: 40 kN

GB Instructions for installations.
Max permitted contact force from machine nozzle: 40 kN

DE Einbauanleitungen
Höchstzulässige Anpreßkraft der Maschinendüse: 40 kN

Enfacksmontering Single Cavity Assembly Einzelfachausführung	Flerfacksmontering Multi Cavity Assembly Mehrfachausführung

NPT1

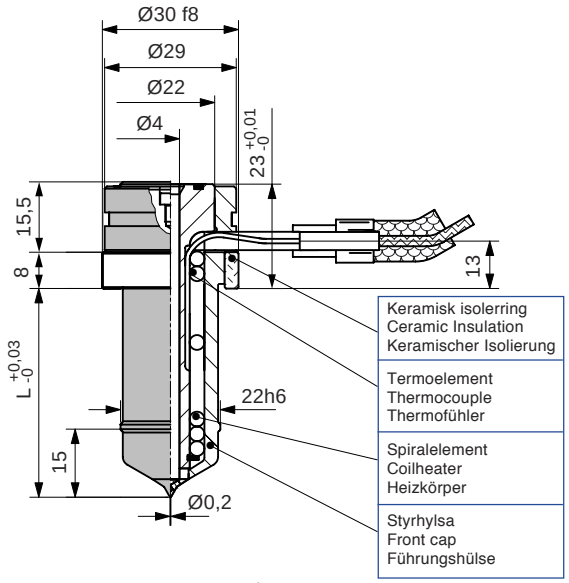

Håltagning i formen
Boring in the clamp plate
Bohrung in der Befestigungsplatte

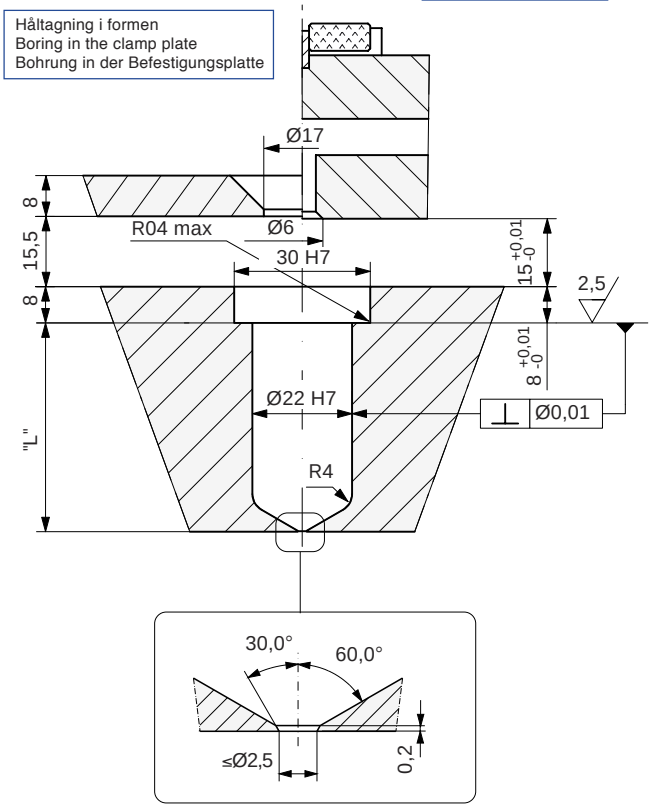

Enfacksmontering Single Cavity Assembly Einzelfachausführung	Flerfacksmontering Multi Cavity Assembly Mehrfachausführung

NPT1-Xtnd

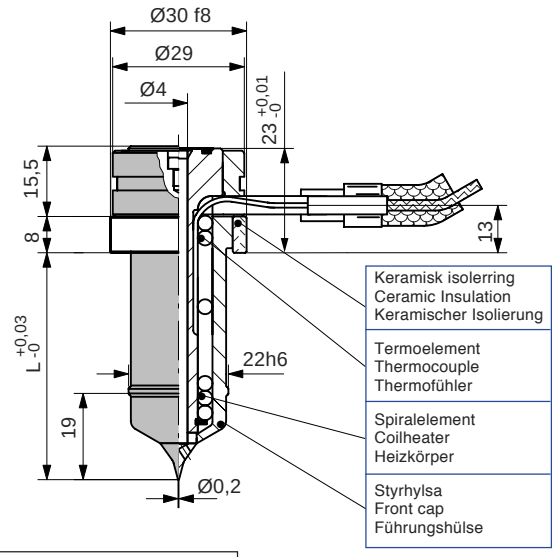

Håltagning i formen
Boring in the clamp plate
Bohrung in der Befestigungsplatte

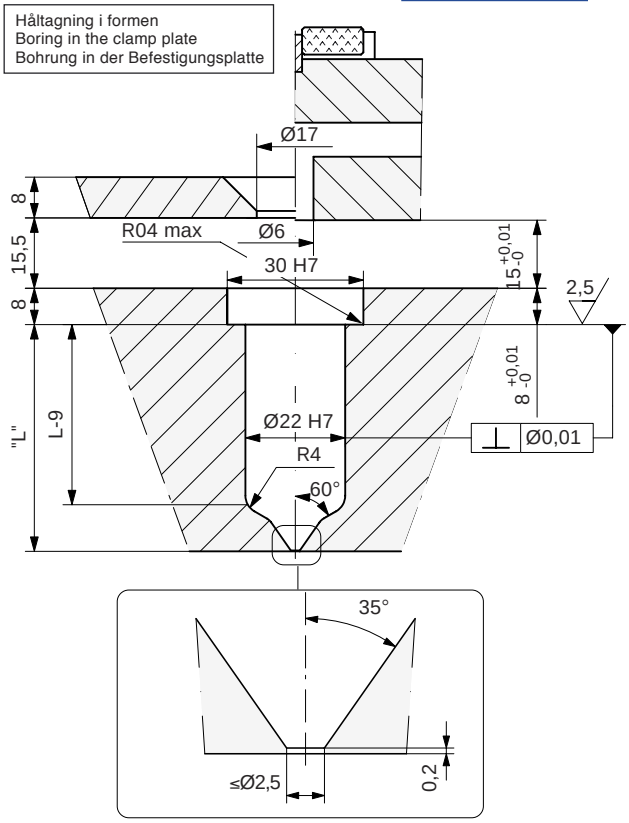

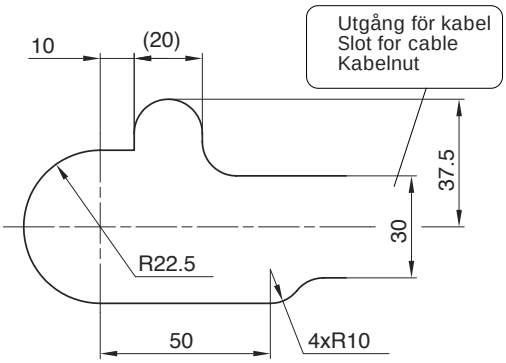

SE Håltagning för bussning med eller utan ringelement

GB Boring in the clamp plate for the bush with or without bandheater

DE Bohrung in der Befestigungsplatte für Düsen mit oder ohne Ringheizer

Art.Nr.
B028013180

© LKM Heatlock Co Ltd

This Heatlock series, below, is currently being replaced by the A1-series of nozzles.
Before you design check availability, stock is gradually decreased.
Spare parts will be available until at least end of 2007 (apart form NPT1 bodies)

svenska

Vid bearbetningstemperaturer över 250 - 260°C kan det vara fördelaktigt att montera ett bakre ringelement på munstycket. Detta gäller även när skärkraftskänsliga material skall bearbetas.

OBS! Detta element måste anslutas till en manuell regulator och bör under inga omständigheter parallellkopplas med spiralelementet och dess termoelement.

Färgmärkning på termoelement.

Svart kabel + (järn),vit kabel–.

Termoelementets kopplingshylsa har en max. temperaturbeständighet på 240°C.

english

When temperatures of 250–260 °C and above are needed it may be advantageous to install a heater band at the back end. This is also the case when shearsensitive materials are to be moulded.

NB This element must be connected to a manual controller and should under no circumstances be connected in parallel with the coilheater and its thermocouple.

Colour code for thermocouple wires.

Black wire + (Iron)White wire —.

The connector sleeve of the thermocouple has a max. temperature resistance of 240 °C.

deutsch

Sind Temperaturen von 250-260° C oder höher erforderlich, ist die Anbringung eines zusätzlichen Ringheizkörpers am hinteren Heißkanalende zu empfehlen. Dies gilt auch für die Verarbeitung von scherkraftempfindlichen Kunststoffen.

ACHTUNG! Dieser Heizkörper ist an seinen eigenen, handbetätigten Regler anzuschließen. Er darf keinesfalls mit dem Spiralheizkörper und dessen Temperaturfühler parallelgeschaltet werden.

Farbkennzeichnung des Temperaturfühlers:

Schwarz Kabel + (Eisen), Weiß Kabel –

Die Anschlußhülse des Temperaturfühlers ist bis 240° C hitzebeständig.

Före inbyggnad mät upp bussningens nominella "L"-mått, lägg därefter till längdutvigdningen så att bussningens spets ligger exakt vid intagspunkten i uppvärmt tillstånd.

To ensure minimum vestige on the part.Measure the actual “L” measurement on each bush, add the length expansion according to the adjacent table to get the hole depth (“L”+X,xx) to be drilled in the cavity plate

Vor dem Einbau Nennmaß ”L” der Düse bestimmen und um den Wert der Längenausdehnung erweitern, damit die Düsenspitze im heißen Zustand genau am Angußpunkt liegt.

°C="L"+X,xx					
°C	26	36	46	86	106
200	0,03	0,04	0,05	0,10	0,12
250	0,04	0,05	0,06	0,12	0,15
300	0,04	0,06	0,08	0,14	0,18
350	0,05	0,07	0,09	0,17	0,21

Nålspetsen har en diameter på 0,2 mm. Med intagsdiameter 1 mm blir därför intags-spalten c:a 0,4 mm.

Diagrammet ger riktvärde på den intags-diameter, som behövs för olika plaster och skottvikter.

OBS! En för liten intagsdiameter betyder bl.a. att onödigt hög temperatur måste ställas in på munstycket för att intaget ej skall frysa mellan skotten.

1. Lågviskösa (PS, PE, PP)
2. Medelviskösa (ABS, SAN, PA, POM)
3. Högviskösa (PC, PMMA, Noryl, fyllda material)

The diameter of tip is 0.2 mm. With a gate diameter of 1 mm the gap will therefore be about 0.4 mm.

The diagram gives guideline figures for the gate diameter needed for different plastics and shot weights.

Note: If the gate diameter is too small, an unnecessarily high bushing temperature will have to be set for the gate not to freeze between shots.

1. Low-viscosity material (PS, PE, PP)
2. Medium-viscosity material (ABS, SAN, PA, POM)
3. High-viscosity material (PC, PMMA, Noryl)

Die Nadelspitze hat einen Durchmesser von 0,2 mm. Somit entsteht bei einen Angussdurchmesser von 1,0 mm einen Angusspalt von etwa 0,4 mm.

Das Diagramm gibt Richtwerte für den bei unterschiedlichen Kunststoffen und Schußgewichten benötigten Angußdurchmesser an.

ACHTUNG! Zu geringer Angußdurchmesser erfordert eine unnötig hohe Temperatur der Düse, damit der Anguß zwischen den Schüssen nicht erstarrt. Säubern der Düse, auswechseln von Spiralheizkörpen bzw. Temperaturfühler.

1. Niederviskose Kunststoffe (PS, PE, PP)
2. Mittelviskose Kunststoffe (ABS, SAN, PA, POM)
3. Hochviskose Kunststoffe (PC, PMMA, Noryl)

Skottvikt per munstycke
Shot-weight per nozzle
Schußgewicht je Düse

g

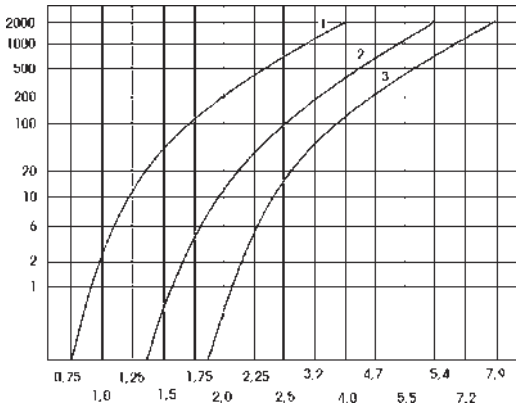

Intagsdiameter
Gate diameter
Angußdurchmesser

mm

© LKM Heatlock Co Ltd

This Heatlock series, below, is currently being replaced by the A1-series of nozzles.
Before you design check availability, stock is gradually decreased.
Spare parts will be available until at least end of 2007 (apart form NPT1 bodies)

Montering av bussning / Bushing Assembly / Einbau von Heatlock-Düsen

1

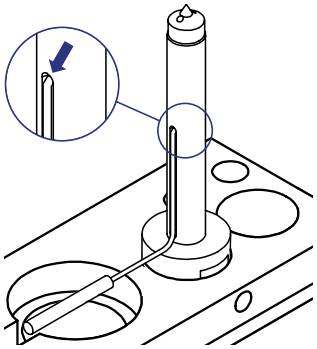

SE Montera TC enligt figur.

GB Assemble the TC as in the drawing.

DE Einbau von TC nach Abbildung.

2

SE Montera elementet genom att försiktigt ”skruva” upp spiralen något. Trä över elementet på pipan och släpp efter med verktyget. Kontrollera att elementet smiter åt runt pipan och bottnar mot skallen, samt att elementet linjerar med den fasade kanten vid pipans spets.

GB Assemble the coilheater by carefully ”unscrewing” the coil spring slightly. Thread the heater over the pipe and release using the tool. Check that the coilheater fits tightly around the pipe and touches the head, and that the coilheater is in line with the chamfered edge at the point of the pipe.

DE Montieren Sie den Heizkörper durch vorsichtiges ”nach oben schrauben” der Spirale. Ziehen Sie den Heizkörper über das Rohr und lockern Sie diesen mit Hilfe eines Werkzeugs. Vergewissern Sie sich, dass der Heizkörper am Rohr richtig anliegt und am Kopf richtig ansitzt und kontrollieren Sie, dass der Heizkörper entlang der abgeschrägten Kante am Ende des Rohrs verläuft.

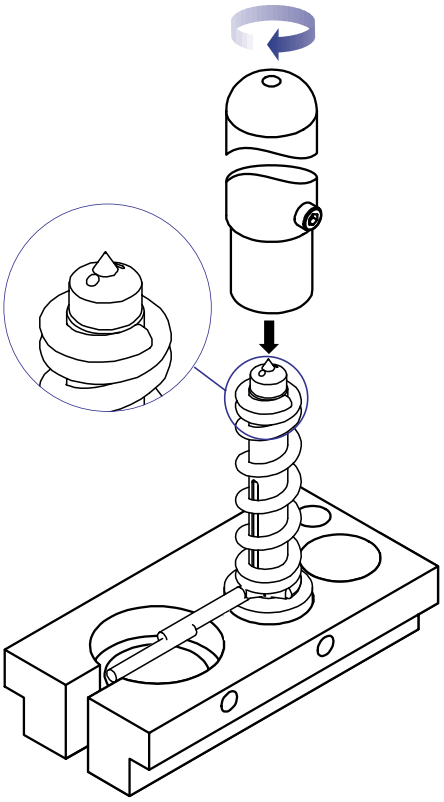

3

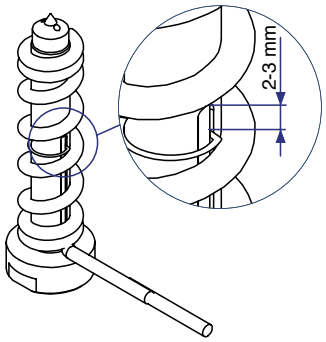

SE Sätt på clips för låsning av TC. Kontrollera höjd enligt figur.

GB Put on the clip for locking the TC. Check the height according to the drawing.

DE Bringen Sie den Sicherungsring für TC an. Kontrollieren Sie die Höhe gemäb Abb.

4a

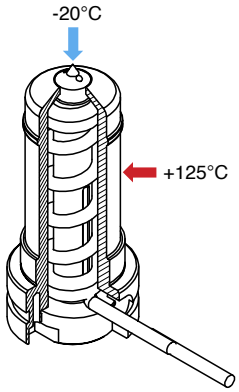

SE Montera hylsa och pipa. Börja med att kyla ned pipan till -20°C, samtidigt värmer du hylsan till +125°C i ugn. Pressa sedan hylsan över röret.

GB Assemble the sleeve and the pipe. Begin by cooling the pipe to -20°C, at the same time heat the sleeve to +125°C in an oven. Then press the sleeve over the pipe.

DE Montieren Sie Hülse und Rohr. Beginnen Sie, indem Sie das Rohr auf - 20°C abkühlen, gleichzeitig erwärmen Sie die Hülse auf + 125°C im Ofen. Pressen Sie anschliebend die Hülse über das Rohr.

4b

SE **Vid demontering.** Förankra bussningen i hållarplattan och knacka ur pipan ur hylsan med hjälp av don.

GB **Disassembly.** Anchor the bushing in the holder plate and knock out the pipe with the help of a tool.

DE **Beim Zerlegen:** verankern Sie die Düse in der Befestigungs-platte und lösen Sie das Rohr aus der Hülse mit Hilfe einer Vorrichtung.

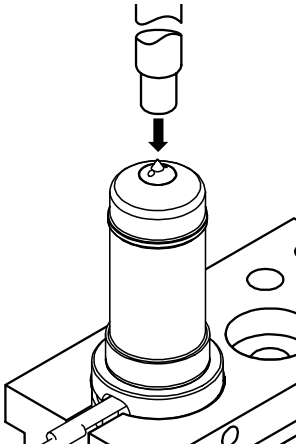

5

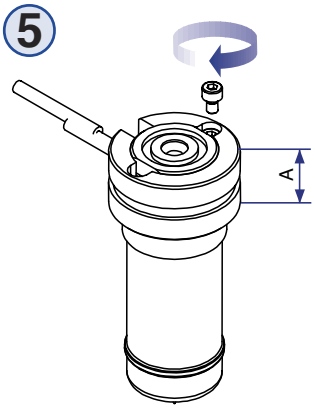

SE Dra åt skruvarna växelvis ordentligt. Kontrollera att höjden ”A” är samma före och efter montering.

GB Tighten the screws in turn, fully. Check that the height ”A” is the same before and after assembly.

DE Ziehen Sie die Schrauben wechseweise sorgfältig an. Achten Sie darauf, dass die Höhe ”A” vor und nach dem Einbau identisch ist.

SE Denna monteringsanvisning baseras på att du använder vårt monteringskit EBPPNP1KIT.

GB This assembly instruction is based on the use of our assembly kit EBPPNP1KIT.

DE Diese Einbauanleitung geht von der Benutzung unseres Einbaukittes EBPPNP1KIT aus.

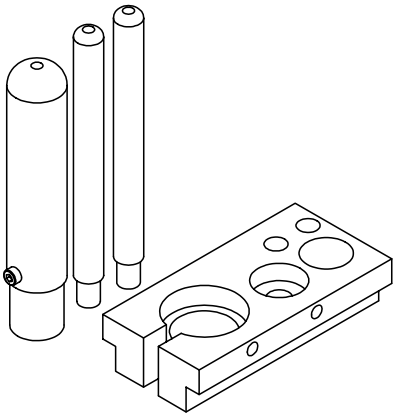

Heatlock AB © 020925. Notice: latest version always available on our website, www.heatlock.com

© LKM Heatlock Co Ltd

This Heatlock series, below, is currently being replaced by the A1-series of nozzles.
Before you design check availability, stock is gradually decreased.
Spare parts will be available until at least end of 2007 (apart form NPT1 bodies)

HEATLOCK® NPT2..., NEEDLE POINT TOPLESS

Instructions for installations.

Max permitted contact force from machine nozzle: 4T

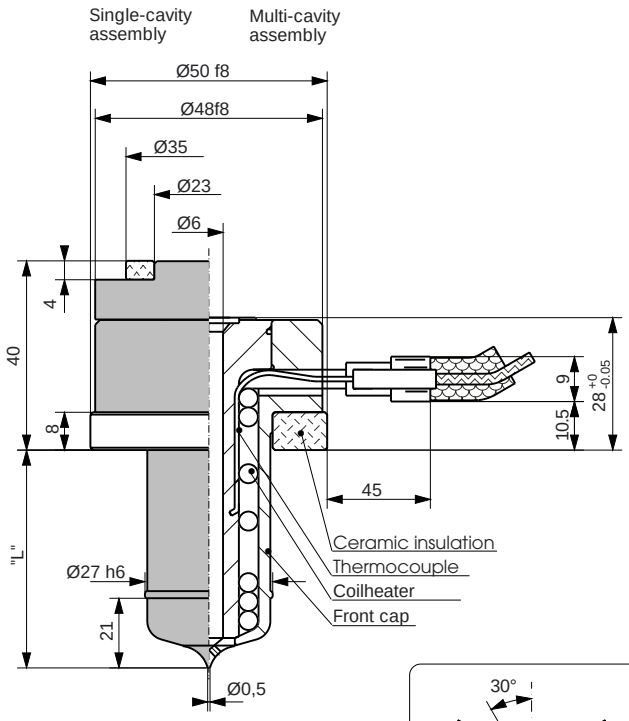

Boring dimensions

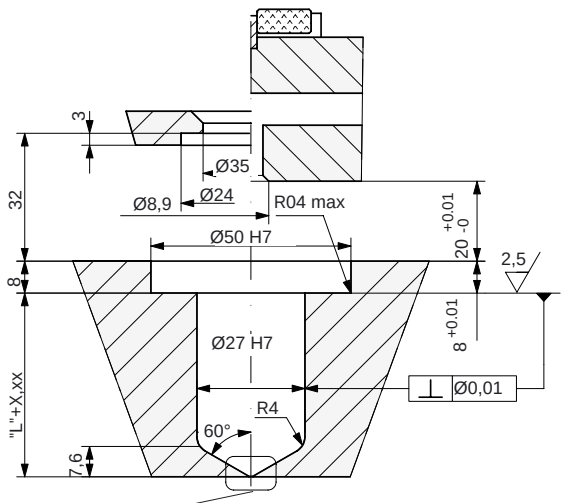

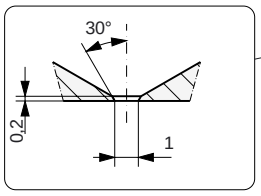

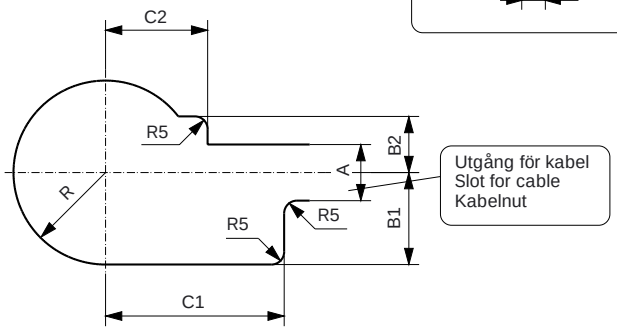

Boring in the clamp plate for the bush with or without bandheater:

Art. nr.	R	A	B1	B2	C1	C2
Bushing	28	20	-	-	-	-
B047015315	36	22	15	22	45	45
B048020180	36	22	36	22	70	40

Colour code for thermocouple wires.

Black (red) wire + (Iron) White (blue) wire —.

The connector sleeve of the thermocouple has a max. temperature resistance of 240 °C.

When temperatures of 250–260 °C and above are needed it may be advantageous to install a heater band at the back end. This is also the case when shearsensitive materials are to be moulded.

Length of the bushing.

To ensure minimum vestige on the part.
Measure the actual “L” measurement on each bush, add the length expansion according to the adjacent table to get the hole depth (“L”+X,xx) to be drilled in the cavity plate

°C="L"+X,xx			
°C	26	46	66
200	+0,10	+0,17	+0,23
250	+0,13	+0,21	+0,30
300	+0,16	+0,26	+0,36
350	+0,19	+0,30	+0,42

Date: 001101, © Heatlock AB

© LKM Heatlock Co Ltd

This Heatlock series, below, is currently being replaced by the A1-series of nozzles.
Before you design check availability, stock is gradually decreased.
Spare parts will be available until at least end of 2007 (apart form NPT1 bodies)

HEATLOCK

Size of gate.

The diameter of tip is 0.5 mm. With a gate diameter of 1 mm the gap will therefore be about 0.25 mm.

Shot-weight per nozzle

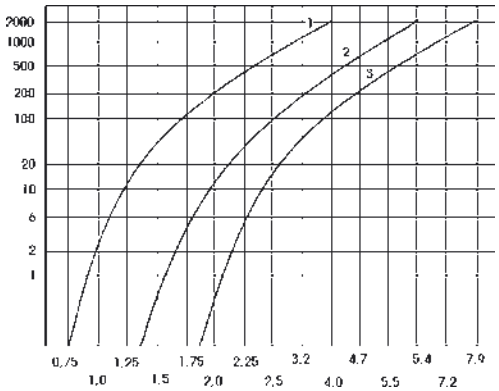

Gate diameter

1. Low-viscosity material (PS, PE, PP)
2. Medium-viscosity material (ABS, SAN, PA, POM)
3. High-viscosity material (PC, PMMA, Noryl, fyllda material)

The diagram gives guideline figures for the gate diameter needed for different plastics and shot weights. Note: If the gate diameter is too small, an unnecessarily high bushing temperature will have to be set for the gate not to freeze between shots.

Disassembly , instructions for changing the coilheater or thermocouples.

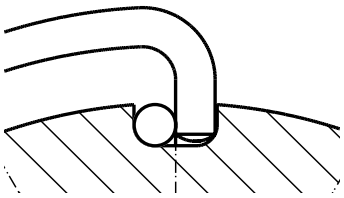

1. Unscrew the screws at the rear end.
2. Take off the rear screws and the back cap, in single-cavity only, and the front cap.
3. Take off the spring that keeps thermocouple in place.
4. Take off the tape that keeps heater and thermocouple extensions together.
5. Depending on how hard the coil heater fits the pipe it can either be pulled of or ”unscrewed”. Unscrewing works easily if you push on the spiral heater extension. This will open the spiral if at the same time you open the spiral at the other end with a suitable tool. The thermocouple must not follow if the spiral element is rotated or pulled off, since it may break. Treat the thermocouple with great care. The tube is only 1 mm diameter.

.

Assembly

To be done in opposite order to disassembly.
If a new thermocouple is to be fitted it must be bent to fit the bushing. The tip of the thermocouple must be located where the groove ends, i.e. about half-way along the tube. Min. bending radius 3 mm.
Tighten the element so that the heating spiral makes contact with the tube.

If you have any questions about installing the bushing, please get in touch with us.

NPT2

HEATLOCK®
Box 236 S–532 23 Skara Phone: +46 511-13200
e-mail: hot.runner@heatlock.se Fax: +46 511-17285
Homepage: http://www.heatlock.se

Heatlock AB. 97-06 / NPT2.mont

Date: 001101, © Heatlock AB

© LKM Heatlock Co Ltd

This Heatlock series, below, is currently being replaced by the A1-series of nozzles.
Before you design check availability, stock is gradually decreased.
Spare parts will be available until at least end of 2007 (apart form NPT1 bodies)

Montering av balk / Manifold Assembly / Einbau des Verteilerbalkens

svenska

Kontrollera följande innan varmkanalsbalken monteras slutgiltigt (se översikten på vänster sida):

1. Justera in all keramik , isolering för varje bussning så att samtliga ligger på samma nivå som Plan ”B”.
2. Sätt dit bussningarna och kontrollera att bussningarna / torpedernas bakre plan ligger inom samm höjd, 0,01 mm, enligt mätvärdesnivå “C”. Använd tre mätpukter på respektive bussning.
3. Sätt ihop keramiken KEM03001017 med stödet DSP0353010, mät upp totalhöjden, (ca.24mm). Mät upp och minska denna höjd med det förborrade djupet för keramiken i varmkanalbalken, (ca. 2 mm) samt det uppmätta måttet mellan plan “C” och plan “B” (ca. 15,5 eller 20 mm beroende på bussning), återstående ca 6,5 eller 2 mm försänkes i formplattan. Viktigt är att varmkanalbalken ligger i samma nivå som bussningarna och inte glappar eller “rullar” under centrumstödet.
4. Om varmkanalbalken skall bultas fast kontrollera då att hålbilden i balken överenstämmer med hålbilden i formplattan.
5. Sätt ihop det bakre keramiken KE02500305 med stödet DSP0300306 / DSP0300312, försäkra Dig om att keramiken bottnar i stödet. Mät upp och kontrollera höjden på samtliga enheter. Om eventuell avikelse förekommer , slipa in samtliga till samma höjd, inom 0.005mm, slipa på stödets undersida. Fixera sedan denna enhet med stift DW03X12 i de förborrade hålen i balken. Korrigera även här luftspalten som skall råda i kallt tillstånd som krävs för värmeexpandering i enlighet med *tabell 1*. Plan “D”.
6. Lägg varmkanalbalken på ingötsbussningarna, som centreras i centrumstödet KEM03001017. Vridfixeringen görs med hjälp av en Cylindrisk Pinne som placeras i det förfrästa spåret i balken. Detta görs utan att O-ringarna är monterade.
7. Skruva fast varmkanalbalken med avsedda skruvar om balken skall bultas fast, kontrollera även att samtliga kablar är fria.
8. Kontrollera här nivån på de bakre stödens ovansida -plan “D”, samtliga skall nu ligga inom 0.005 mm.
9. Ta av balken montera samtliga O-ringar, återmontera och kontrollera att det inte finns några ledningar i kläm eller som ligger an mot varmkanalbalken.
10. Kontrollera att varmkanalbalken är tillbaka till rätt nivå / höjd från mätvärdesnivå “D”. Om varmkanalbalken inte är fastskruvad monteras fästplattan och dras fast så att O-ringarna pressas samman innan denna kontroll genomförs. Värm upp systemet till drifttemperatur innan fästplattan tas bort för den sista kontrollen.

Bänkprovet är viktigt. Det visar om de elektriska komponenterna och ledningsdragningen fungerar. Ju fler delar du vet fungerar till 100 %, desto bättre.

english

Check the following before the manifold is finally assembled (see overview on the left side):

1. Adjust all the ceramics, insulation for each bushing so that they are all at the same level as Plan ”B”.
2. Put in the bushings and check that the bushings / torpedoes rear plane is at the same height, 0,01 mm, according to the measurement level “C”. Use three measuring points in each bushing.
3. Assemble the ceramic KEM03001017 with the support DSP0353010, measure the total height (approx.24mm). Measure and reduce this height by the pre-bored depth of the ceramic in the manifold, (approx. 2 mm) and the measured distance between plane “C” and plane “B” (approx. 15,5 or 20 mm depending on the bushing), the remaining 6,5 or 2 mm is countersunk in the form plate. It is important that the manifold is at the same level as the bushings and don’t have too much play or “roll” under the central support.
4. If the manifold is to be bolted check that the shape of the hole in the manifold matches the hole shape in the cavity plate.
5. Assemble the back support KE02500305 with the support DSP0300306 / DSP0300312, make sure that the ceramic reaches the bottom of the support. Measure and check the height of all the units. If there are any discrepancies, adjust all to the same height within 0.005 mm, work with the underside of the support. Fix this with dowel DW03X12 in the pre-bored holes in the manifold. Correct here for the air gap which there shall be in cold condition to allow for heat expansion according to *table 1*. plane “D”.
6. Put the manifold on the bushings, which is centred using the ceramic center support KEM03001017. Torsion fixing is done with the help of dowels which are placed in the pre-milled slot in the manifold. This is done without the O-rings mounted.
7. Tighten the manifold with the screws provided if the manifold is to be bolted, check that all the cables are free.
8. Check the level of the upper part of the rear support plane “D”, they shall all be within 0.005 mm.
9. Take off the manifold, assemble all the O-rings, re-assemble and check that there are no trapped cables or cables laying against the manifold.
10. Check that the manifold is back at the right level/height from the measurement level “D”. If the manifold isn’t fixed the fixing plate is mounted and tightened so that the O-rings are pressed together before the control is carried out. Heat up to running temperature before the clamp plate is removed for the final check.

Bench testing is important. It proves the electrics and wiring. The more areas that you know are working 100% the better.

deutsch

Vor dem endgültigen Einbau der Heißkanalplatte muss Folgendes beachtet werden (siehe links):

1. Justieren Sie die keramische Zentrierung, die Isolierung jeder Düse so, dass sämtliche auf der gleichen Ebene, wie in der Abb. unter ”B” angegeben, liegen.
2. Bringen Sie die Düsen an und kontrollieren Sie, dass der hintere Teil der Düsen/Torpedos innerhalb der gleichen Höhe , 0,01 mm, laut Messwertstufe ”C”, liegt. Bedienen Sie sich dreier Messpunkte an der entsprechenden Düse.
3. Einbau der keramischen Zentrierung KEM03001017 mit Zentrierhülse DSP0353010 und Messen der Gesamthöhe (ca 24 mm):
   Messen und vermindern Sie die Höhe mit den vorgebohrten Durchgängen für die keramische Zentrierhülse an der Heißkanalplatte, (ca 2 mm) sowie den Messwert zwischen Stufe ”C” und ”B” (ca 15,5 oder 20 mm je nach Wahl der Düse). Die verbleibenden ca 6,5 oder 2 mm werden in die Formplatte versenkt. Wichtig dabei ist, dass die Heißkanalplatte auf gleicher Ebene wie die Düsen liegt und nicht schleudern oder schlingern darf.
4. Wenn die Heißkanalplatte verbolzt werden soll, ist darauf zu achten, dass die Durchgangs- und Gewindebohrungen im Verteilerbalken mit der der Formplatte genau übereinstimmen.
5. Verbinden Sie den hinteren keramischen Stützring KE02500305 mit der hinteren Hülse DSP0300306/DSP0300312, vergewissern Sie sich, dass Sie richtig eingesetzt ist. Vermessen und kontrollieren Sie die Höhen an sämtlichen Einheiten. Sollten eventuelle Abweichungen vorkommen, korriegieren Sie diese durch Abschleifen auf die gleiche Höhe, innerhalb einer Toleranz von 0.005 mm, schleifen Sie die Unterseite der Hülse. Fixieren Sie anschliebend diese Einheit mit dem Stift DW03X12 in die vorgebohrten Durchgänge am Verteiler. Korrig-ieren Sie auch hier den Luftspalt im kalten Zustand zum Zwecke der Wärmeausdehnung. Vgl. *Tabelle 1*. ”D”.
6. Legen Sie die Heißkanalplatte auf die Eingussdüsen, die in der keramischen Zentrierung KEM03001017 zentriert werden. Die Drehfixierung geschieht mit Hilfe eines zylindrischen Stiftes, der an der vorgefrästen Nute am Verteiler angebracht wird. Dieser Vorgang wird ohne das Vorhandensein von O-Ringen durchgeführt.
7. Schrauben Sie den Verteilerbalken, falls die Platte verschraubt werden soll, mit den vorgesehenen Schrauben fest. Überprüfen Sie, dass sämtliche Leitungen freigelegt sind.
8. Kontrollieren Sie die Werte der Oberseite der hinteren keramischen Stützscheibe (vgl. ”D”). Die Toleranzgrenze von 0,005 mm darf nicht überschritten werden.
9. Nehmen Sie den Verteiler ab, legen Sie sämtliche O-Ringe an, bringen Sie den Verteiler wieder an und versichern Sie sich, dass keine Leitungen eingeklemmt sind oder an der Heißkanalplatte anliegen.
10. Überprüfen Sie, dass sich die Heißkanalplatte, vom Ausgangswert ”D” aus, wieder auf der richtigen Höhenstufe befindet. Falls die Heißkanalplatte noch nicht angeschraubt ist, wird die Befestigungsplatte montiert und fest angezogen, so dass die O-Ringe zusammengepresst werden, bevor die Prüfung durchgeführt wird. Erwärmen Sie das System auf Betriebstemperatur, bevor die Befestigungsplatte zur letzten Kontrolle entfernt wird.

Eine Endabnahme ist notwendig und wichtig. Sie garantiert die Richtigkeit der Funktionen aller elektrischen Komponenten und Leitungen. Je mehr Sie sich von der 100%ige Funktionstauglichkeit der Teile überzeugen, desto erfolgreicher die Arbeit.

HEATLOCK® NPT3

Art. Nr: CAI-NPT3 Rev:01
Art. Nr: CAI-NPT3 Rev:01

6

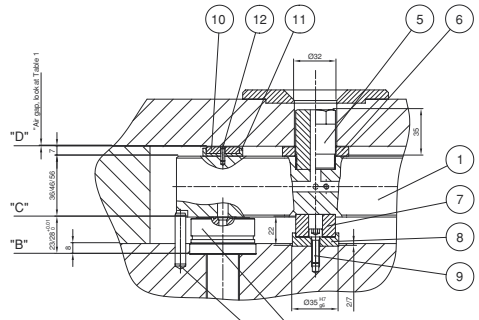

Table 1 / tabell 1 / Tabelle 1

Heat expansion			
°C	T=36	T=46	T=56
200	0.08	0.10	0.13
250	0.10	0.13	0.16
300	0.12	0.16	0.20
350	0.14	0.18	0.23

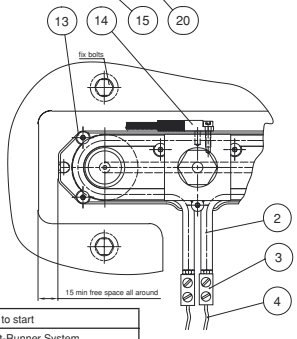

Item	Qty	Art. Nr.	Description
31	1	HEATMANPROOF	Proof of drawing in order to start
30	1	HEATMANDOC	Documentation of the Hot-Runner System
20	2	ESB2046102	Sprue Bush, Series 2, L=46 mm
15	1	DW08X40	Dowell Ø8x40
14	1	TC00040180	Thermocouple, L=12
13	14	MF6S08X008	Screw M5x8
12	2	DW03X12	Dowell Ø3x12
11	2	DSP0300306	Back Spacer
10	2	KE02500305	Ceramic Back Support
9	1	CS06020	Screw M6x20
8	1	DSP0353010	Center Location spacer
7	1	KEM03001017	Ceramic Center Spacer
6	1	DSPP503107	Purge Guard
5	1	DSP4503008	Feedbush
4	4	MHWIRE050	Wire
3	4	MHCONN001	Ceramic Connector
2	2	MHI02400	Tubular Heater
1	1	MI2400004608	Standard Manifold, CC=240mm, Feed=Ø8 mm

© LKM Heatlock Co Ltd

This Heatlock series, below, is currently being replaced by the A1-series of nozzles.
Before you design check availability, stock is gradually decreased.
Spare parts will be available until at least end of 2007 (apart form NPT1 bodies)

SE Anvisning för inbyggnad.
Max. tillåten anläggningskraft från maskinmunstycke: 40 kN

GB Instructions for installations.
Max permitted contact force from machine nozzle: 40 kN

DE Einbauanleitungen
Höchstzulässige Anpreßkraft der Maschinendüse: 40 kN

Enfacksmontering Single Cavity Assembly Einzelfachausführung	Flerfacksmontering Multi Cavity Assembly Mehrfachausführung

NPT3

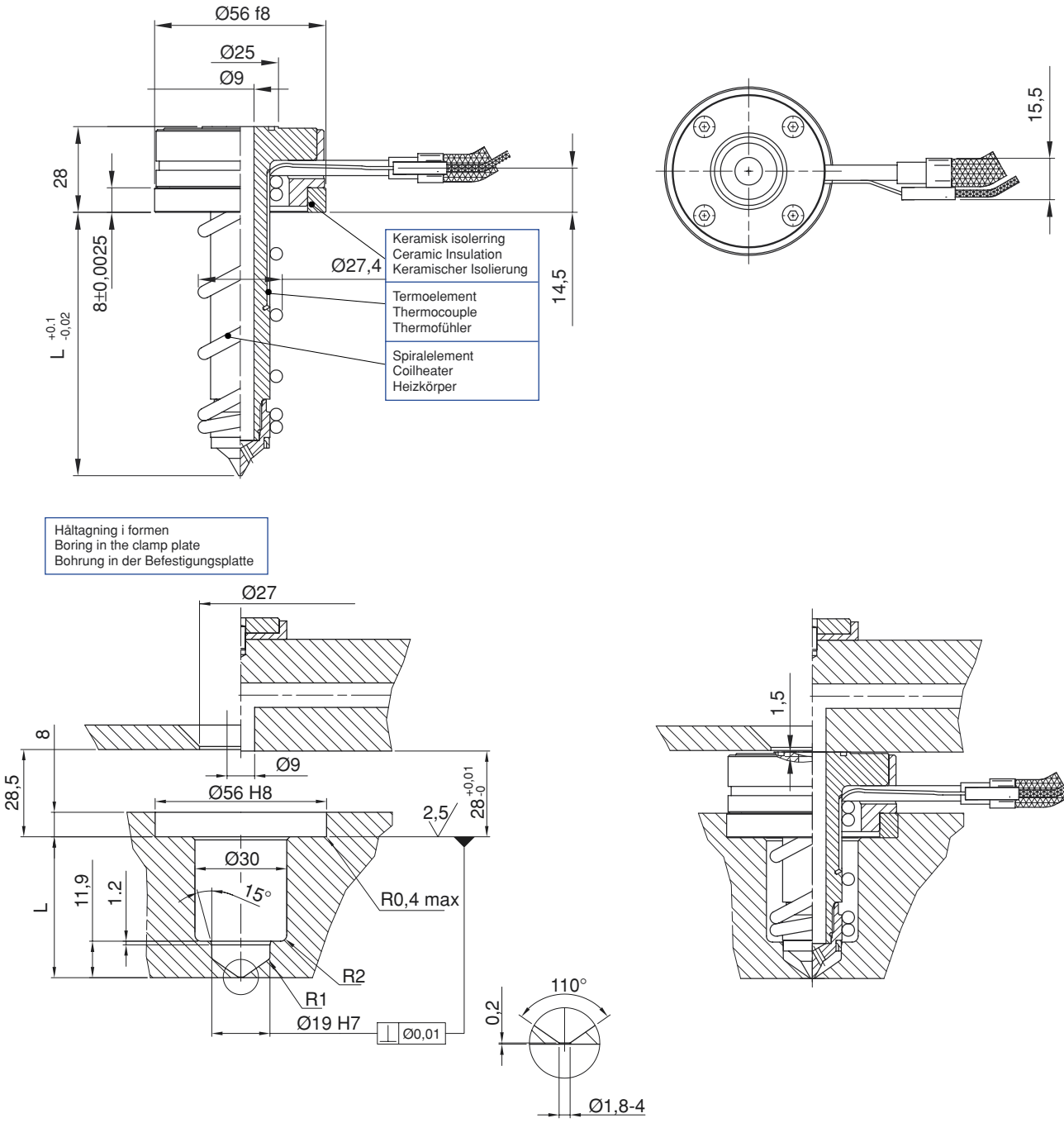

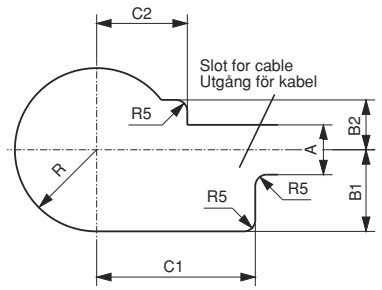

Part No.	R	A	B1	B2	C1	C2
Bush	28	22	-	-	-	-
B055020180	40	22	42	22	85	45

Håltagning för bussning med eller utan bandelement B055020180.

Cavity instructions for bushes with or without bandheater B055020180.

Bohrung in der Befestigungsplatte für Düsen mit oder ohne Ringheizer B055020180.

© LKM Heatlock Co Ltd

This Heatlock series, below, is currently being replaced by the A1-series of nozzles.
Before you design check availability, stock is gradually decreased.
Spare parts will be available until at least end of 2007 (apart form NPT1 bodies)

svenska

Vid bearbetningstemperaturer över 250 - 260°C kan det vara fördelaktigt att montera ett bakre ringelement på munstycket. Detta gäller även när skärkraftskänsliga material skall bearbetas.

OBS! Detta element måste anslutas till en manuell regulator och bör under inga omständigheter parallellkopplas med spiralelementet och dess termoelement.

Färgmärkning på termoelement.

Svart kabel + (järn),vit kabel–.

Termoelementets kopplingshylsa har en max. temperaturbeständighet på 240°C.

english

When temperatures of 250–260 °C and above are needed it may be advantageous to install a heater band at the back end. This is also the case when shearsensitive materials are to be moulded.

NB This element must be connected to a manual controller and should under no circumstances be connected in parallel with the coilheater and its thermocouple.

Colour code for thermocouple wires.

Black wire + (Iron) White wire —.

The connector sleeve of the thermocouple has a max. temperature resistance of 240 °C.

deutsch

Sind Temperaturen von 250-260° C oder höher erforderlich, ist die Anbringung eines zusätzlichen Ringheizkörpers am hinteren Heißkanalende zu empfehlen. Dies gilt auch für die Verarbeitung von scherkraftempfindlichen Kunststoffen.

ACHTUNG! Dieser Heizkörper ist an seinen eigenen, handbetätigten Regler anzuschließen. Er darf keinesfalls mit dem Spiralheizkörper und dessen Temperaturfühler parallelgeschaltet werden.

Farbkennzeichnung des Temperaturfühlers:

Schwarz Kabel + (Eisen), Weiß Kabel –

Die Anschlußhülse des Temperaturfühlers ist bis 240° C hitzebeständig.

Length expansion at: °C="L"+X,xx						
°C	46	66	86	116	146	176
200	0,11	0,15	0,20	0,27	0,34	0,40
250	0,13	0,19	0,25	0,33	0,42	0,51
300	0,16	0,23	0,30	0,40	0,50	0,61
350	0,19	0,27	0,35	0,47	0,59	0,71

Före inbyggnad, mät upp bussningens nominella "L"-mått, lägg därefter till längdutvidgningen så att bussningens spets ligger exakt vid intagspunkten i uppvärmt tillstånd.

To ensure minimum vestige on the part, measure the actual "L" measurement on each bush, add the length expansion according to the table to get the hole depth ("L"+X,xx) to be drilled in the cavity plate.

Vor dem Einbau Nennmaß "L" der Düse bestimmen und um den Wert der Längenausdehnung erweitern, damit die Düsenspitze im heißen Zustand genau am Angußpunkt liegt.

Nålspetsen har en diameter på 1,0 mm. Med intagsdiameter 1,8 mm blir därför intags-spalten c:a 0,4 mm.

Diagrammet ger riktvärde på den intags-diameter, som behövs för olika plaster och skottvikter.

OBS! En för liten intagsdiameter betyder bl.a. att onödigt hög temperatur måste ställas in på munstycket för att intaget ej skall frysa mellan skotten.

1. Lågviskösa (PS, PE, PP)
2. Medelviskösa (ABS, SAN, PA, POM)
3. Högviskösa (PC, PMMA, Noryl, fyllda material)

The diameter of tip is 1., mm. With a gate diameter of 1.8 mm the gap will therefore be about 0.4 mm.

The diagram gives guideline figures for the gate diameter needed for different plastics and shot weights.

Note: If the gate diameter is too small, an unnecessarily high bushing temperature will have to be set for the gate not to freeze between shots.

1. Low-viscosity material (PS, PE, PP)
2. Medium-viscosity material (ABS, SAN, PA, POM)
3. High-viscosity material (PC, PMMA, Noryl)

Die Nadelspitze hat einen Durchmesser von 1,0 mm. Somit entsteht bei einen Angussdurchmesser von 1,8 mm einen Angusspalt von etwa 0,4 mm.

Das Diagramm gibt Richtwerte für den bei unterschiedlichen Kunststoffen und Schußgewichten benötigten Angußdurchmesser an.

ACHTUNG! Zu geringer Angußdurchmesser erfordert eine unnötig hohe Temperatur der Düse, damit der Anguß zwischen den Schüssen nicht erstarrt. Säubern der Düse, auswechseln von Spiralheizkörpen bzw. Temperaturfühler.

1. Niederviskose Kunststoffe (PS, PE, PP)
2. Mittelviskose Kunststoffe (ABS, SAN, PA, POM)
3. Hochviskose Kunststoffe (PC, PMMA, Noryl)

Skottvikt per munstycke
Shot-weight per nozzle
Schußgewicht je Düse

g

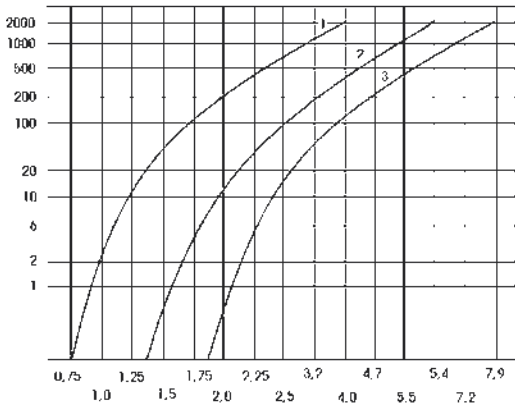

Intagsdiameter
Gate diameter
Angußdurchmesser

mm

© LKM Heatlock Co Ltd

This Heatlock series, below, is currently being replaced by the A1-series of nozzles.
Before you design check availability, stock is gradually decreased.
Spare parts will be available until at least end of 2007 (apart form NPT1 bodies)

Montering av bussning / Bushing Assembly / Einbau von Heatlock-Düsen

1

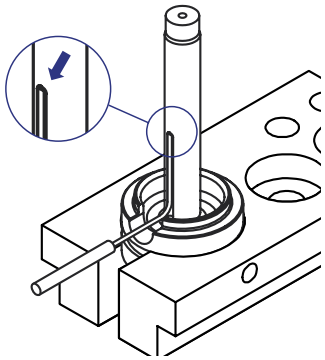

SE Montera TC enligt figur.

GB Assemble the TC as in the drawing.

DE Einbau von TC nach Abbildung.

2

SE Montera elementet genom att försiktigt ”skruva” upp spiralen något. Trä över elementet på pipan och släpp efter med verktyget. Kontrollera att elementet smiter åt runt pipan och bottnar mot skallen, samt att elementet linjerar med den fasade kanten vid pipans spets.

GB Assemble the coilheater by carefully ”unscrewing” the coil spring slightly. Thread the heater over the pipe and release using the tool. Check that the coilheater fits tightly around the pipe and touches the head, and that the coilheater is in line with the chamfered edge at the point of the pipe.

DE Montieren Sie den Heizkörper durch vorsichtiges ”nach oben schrauben” der Spirale. Ziehen Sie den Heizkörper über das Rohr und lockern Sie diesen mit Hilfe eines Werkzeugs. Vergewissern Sie sich, dass der Heizkörper am Rohr richtig anliegt und am Kopf richtig ansitzt und kontrollieren Sie, dass der Heizkörper entlang der abgeschrägten Kante am Ende des Rohrs verläuft.

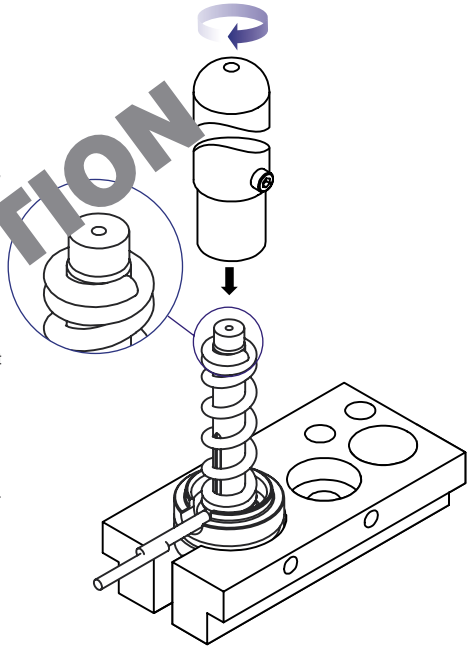

3

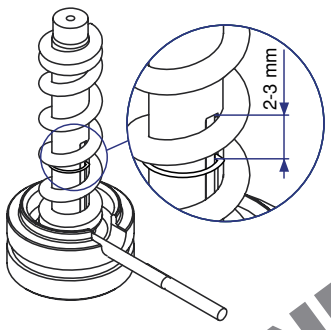

SE Sätt på clips för låsning av TC. Kontrollera höjd enligt figur.

GB Put on the clip for locking the TC. Check the height according to the drawing.

DE Bringen Sie den Sicherungsclip für TC an. Kontrollieren Sie die Höhe gemäß Abb.

UNDER CONSTRUCTION

5

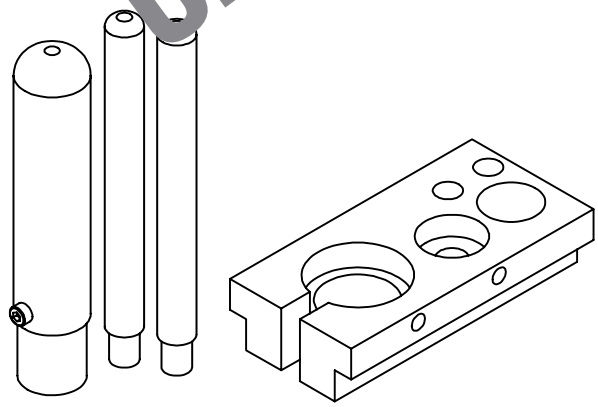

SE Denna monteringsanvisning baseras på att du använder vårt monteringskit **EBPPNP1KIT**.

GB This assembly instruction is based on the use of our assembly kit **EBPPNP1KIT**.

DE Diese Einbauanleitung geht von der Benutzung unseres Einbaukittes **EBPPNP1KIT** aus.

Heatlock AB © 021120. Notice: latest version always available on our website, www.heatlock.com

© LKM Heatlock Co Ltd

This Heatlock series, below, is currently being replaced by the A1-series of nozzles.
Before you design check availability, stock is gradually decreased.
Spare parts will be available until at least end of 2007 (apart form NPT1 bodies)

Montering av balk / Manifold Assembly / Einbau des Verteilerbalkens

svenska

Kontrollera följande innan varmkanalsbalken monteras slutgiltigt (se översikten på vänster sida):

1. Justera in all keramik , isolering för varje bussning så att samtliga ligger på samma nivå som Plan "B".
2. Sätt dit bussningarna och kontrollera att bussningarna / torpedernas bakre plan ligger inom samm höjd, 0,01 mm, enligt mätvärdesnivå "C". Använd tre mätpukter på respektive bussning.
3. Sätt ihop keramiken KE03001017 med stödet DSP0353010, mät upp totalhöjden, (ca.24mm). Mät upp och minska denna höjd med det förborrade djupet för keramiken i varmkanalbalken, (ca. 2 mm) samt det uppmätta måttet mellan plan "C" och plan "B" (ca. 15,5 eller 20 mm beroende på bussning), återstående ca 6,5 eller 2 mm försänkes i formplattan. Viktigt är att varmkanalbalken ligger i samma nivå som bussningarna och inte glappar eller "rullar" under centrumstödet.
4. Om varmkanalbalken skall bultas fast kontrollera då att hålbilden i balken överenstämmer med hålbilden i formplattan.
5. Sätt ihop det bakre keramiken KE02500305 med stödet DSP0300306 / DSP0300312, försäkra Dig om att keramiken bottnar i stödet. Mät upp och kontrollera höjden på samtliga enheter. Om eventuell avikelse förekommer , slipa in samtliga till samma höjd, inom 0.005mm, slipa på stödets undersida. Fixera sedan denna enhet med stift DW03X12 i de förborrade hålen i balken. Korrigera även här luftspalten som skall råda i kallt tillstånd som krävs för värmeexpandering i enlighet med *tabell 1*. Plan "D".
6. Lägg varmkanalbalken på ingötsbussningarna, som centreras i centrumstödet KE03001017. Vridfixeringen görs med hjälp av en Cylindrisk Pinne som placeras i det förfrästa spåret i balken. Detta görs utan att O-ringarna är monterade.
7. Skruva fast varmkanalbalken med avsedda skruvar om balken skall bultas fast, kontrollera även att samtliga kablar är fria.
8. Kontrollera här nivån på de bakre stödens ovansida -plan "D", samtliga skall nu ligga inom 0.005 mm.
9. Ta av balken montera samtliga O-ringar, återmontera och kontrollera att det inte finns några ledningar i kläm eller som ligger an mot varmkanalbalken.
10. Kontrollera att varmkanalbalken är tillbaka till rätt nivå / höjd från mätvärdesnivå "D". Om varmkanalbalken inte är fastskruvad monteras fästplattan och dras fast så att O-ringarna pressas samman innan denna kontroll genomförs. Värm upp systemet till drifttemperatur innan fästplattan tas bort för den sista kontrollen.

Bänkprovet är viktigt. Det visar om de elektriska komponenterna och ledningsdragningen fungerar. Ju fler delar du vet fungerar till 100 %, desto bättre.

english

Check the following before the manifold is finally assembled (see overview on the left side):

1. Adjust all the ceramics, insulation for each bushing so that they are all at the same level as Plan "B".
2. Put in the bushings and check that the bushings / torpedoes rear plane is at the same height, 0,01 mm, according to the measurement level "C". Use three measuring points in each bushing.
3. Assemble the ceramic KE03001017 with the support DSP0353010, measure the total height (approx.24mm). Measure and reduce this height by the pre-bored depth of the ceramic in the manifold, (approx. 2 mm) and the measured distance between plane "C" and plane "B" (approx. 15,5 or 20 mm depending on the bushing), the remaining 6,5 or 2 mm is countersunk in the form plate. It is important that the manifold is at the same level as the bushings and don't have too much play or "roll" under the central support.
4. If the manifold is to be bolted check that the shape of the hole in the manifold matches the hole shape in the cavity plate.
5. Assemble the back support KE02500305 with the support DSP0300306 / DSP0300312, make sure that the ceramic reaches the bottom of the support. Measure and check the height of all the units. If there are any discrepancies, adjust all to the same height within 0.005 mm, work with the underside of the support. Fix this with dowel DW03X12 in the pre-bored holes in the manifold. Correct here for the air gap which there shall be in cold condition to allow for heat expansion according to *table 1*. plane "D".
6. Put the manifold on the bushings, which is centred using the ceramic center support KE03001017. Torsion fixing is done with the help of dowels which are placed in the pre-milled slot in the manifold. This is done without the O-rings mounted.
7. Tighten the manifold with the screws provided if the manifold is to be bolted, check that all the cables are free.
8. Check the level of the upper part of the rear support plane "D", they shall all be within 0.005 mm.
9. Take off the manifold, assemble all the O-rings, re-assemble and check that there are no trapped cables or cables laying against the manifold.
10. Check that the manifold is back at the right level/height from the measurement level "D". If the manifold isn't fixed the fixing plate is mounted and tightened so that the O-rings are pressed together before the control is carried out. Heat up to running temperature before the clamp plate is removed for the final check.

Bench testing is important. It proves the electrics and wiring. The more areas that you know are working 100% the better.

deutsch

Vor dem endgültigen Einbau der Heißkanalplatte muss Folgendes beachtet werden (siehe links):

1. Justieren Sie die keramische Zentrierung, die Isolierung jeder Düse so, dass sämtliche auf der gleichen Ebene, wie in der Abb. unter "B" angegeben, liegen.
2. Bringen Sie die Düsen an und kontrollieren Sie, dass der hintere Teil der Düsen/Torpedos innerhalb der gleichen Höhe , 0,01 mm, laut Messwertstufe "C", liegt. Bedienen Sie sich dreier Messpunkte an der entsprechenden Düse.
3. Einbau der keramischen Zentrierung KE03001017 mit Zentrierhülse DSP0353010 und Messen der Gesamthöhe (ca 24 mm):
   Messen und vermindern Sie die Höhe mit den vorgebohrten Durchgängen für die keramische Zentrierhülse an der Heißkanalplatte, (ca 2 mm) sowie den Messwert zwischen Stufe "C" und "B" (ca 15,5 oder 20 mm je nach Wahl der Düse). Die verbleibenden ca 6,5 oder 2 mm werden in die Formplatte versenkt. Wichtig dabei ist, dass die Heißkanalplatte auf gleicher Ebene wie die Düsen liegt und nicht schleudern oder schlingern darf.
4. Wenn die Heißkanalplatte verbolzt werden soll, ist darauf zu achten, dass die Durchgangs- und Gewindebohrungen im Verteilerbalken mit der der Formplatte genau übereinstimmen.
5. Verbinden Sie den hinteren keramischen Stützring KE02500305 mit der hinteren Hülse DSP0300306/DSP0300312, vergewissern Sie sich, dass Sie richtig eingesetzt ist. Vermessen und kontrollieren Sie die Höhen an sämtlichen Einheiten. Sollten eventuelle Abweichungen vorkommen, korriegieren Sie diese durch Abschleifen auf die gleiche Höhe, innerhalb einer Toleranz von 0.005 mm, schleifen Sie die Unterseite der Hülse. Fixieren Sie anschliebend diese Einheit mit dem Stift DW03X12 in die vorgebohrten Durchgänge am Verteiler. Korrig-ieren Sie auch hier den Luftspalt im kalten Zustand zum Zwecke der Wärmeausdehnung. Vgl. *Tabelle 1*. "D".
6. Legen Sie die Heißkanalplatte auf die Eingussdüsen, die in der keramischen Zentrierung KE03001017 zentriert werden. Die Drehfixierung geschieht mit Hilfe eines zylindrischen Stiftes, der an der vorgefrästen Nute am Verteiler angebracht wird. Dieser Vorgang wird ohne das Vorhandensein von O-Ringen durchgeführt.
7. Schrauben Sie den Verteilerbalken, falls die Platte verschraubt werden soll, mit den vorgesehenen Schrauben fest. Überprüfen Sie, dass sämtliche Leitungen freigelegt sind.
8. Kontrollieren Sie die Werte der Oberseite der hinteren keramischen Stützscheibe (vgl. "D"). Die Toleranzgrenze von 0,005 mm darf nicht überschritten werden.
9. Nehmen Sie den Verteiler ab, legen Sie sämtliche O-Ringe an, bringen Sie den Verteiler wieder an und versichern Sie sich, dass keine Leitungen eingeklemmt sind oder an der Heißkanalplatte anliegen.
10. Überprüfen Sie, dass sich die Heißkanalplatte, vom Ausgangswert "D" aus, wieder auf der richtigen Höhenstufe befindet. Falls die Heißkanalplatte noch nicht angeschraubt ist, wird die Befestigungsplatte montiert und fest angezogen, so dass die O-Ringe zusammengepresst werden, bevor die Prüfung durchgeführt wird. Erwärmen Sie das System auf Betriebstemperatur, bevor die Befestigungsplatte zur letzten Kontrolle entfernt wird.

Eine Endabnahme ist notwendig und wichtig. Sie garantiert die Richtigkeit der Funktionen aller elektrischen Komponenten und Leitungen. Je mehr Sie sich von der 100%ige Funktionstauglichkeit der Teile überzeugen, desto erfolgreicher die Arbeit.

HEATLOCK® TOP2

Art. Nr: CAI-TOP2 Rev:01

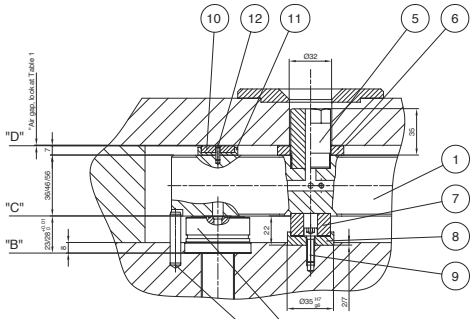

Table 1 / tabell 1 / Tabelle 1

Heat expansion			
°C	T=36	T=46	T=56
200	0.08	0.10	0.13
250	0.10	0.13	0.16
300	0.12	0.16	0.20
350	0.14	0.18	0.23

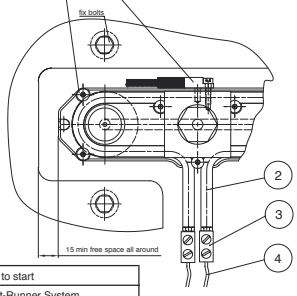

Item	Qty	Art. Nr.	Description
31	1	HEATMANPROOF	Proof of drawing in order to start
30	1	HEATMANDOC	Documentation of the Hot-Runner System
20	2	ESB2046102	Sprue Bush, Series 2, L=46 mm
15	1	DW08X40	Dowell Ø8x40
14	1	TC00040180	Thermocouple, L=12
13	14	MF6S08X008	Screw M5x8
12	2	DW03X12	Dowell Ø3x12
11	2	DSP0300306	Back Spacer
10	2	KE02500305	Ceramic Back Support
9	1	CS06020	Screw M6x20
8	1	DSP0353010	Center Location spacer
7	1	KEM03001017	Ceramic Center Spacer
6	1	DSPP503107	Purge Guard
5	1	DSP4503008	Feedbush
4	4	MHWIRE050	Wire
3	4	MHCONN001	Ceramic Connector
2	2	MHI02400	Tubular Heater
1	1	MI2400004608	Standard Manifold, CC=240mm, Feed=Ø8 mm

© LKM Heatlock Co Ltd

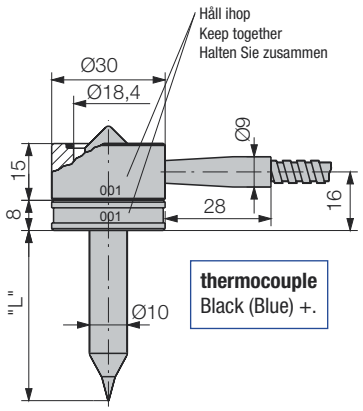

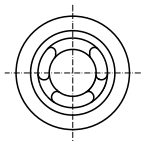

Heatlock TOP2…, torpedo tip, single-cavity version
Ett enkelt sätt att bygga ett enfacksverktyg med direktintag.
Genom den bakre hylsan blir det möjligt att använda vår väl beprövade torped även i enfacksutförande.Du kan på detta sätt bygga verktyg med direkt intag i enfacksutförande på ytor som tidigare var svåra t.ex. lutande plan.
Hylsan är gjord i ett svenskt varmarbetsstål som härdadts för att tåla en lång och hård användning utan att deformeras. Värmetillförseln på bakkroppen sköts och kontrolleras genom ett utvändigt placerat ringelement. I de fall där materialet kräver en noggrann temperaturkontroll används en separat avkännare som mäter temperaturen mitt i bakhylsans gods.
Vår keramiska isoerring som endast har 7% av stålets värmeledningsförmåga används för att isolera bakkroppen från verktyget.

Heatlock TOP2…, torpedo tip, single-cavity version
A simple way of constructing a single-cavity tool with direct gate.
The rear sleeve makes it possible to use our proven torpedo in a single-cavity version as well. This allows you to construct single-cavity direct gate tools on surfaces that used to be tricky, such as inclined planes.
The sleeve is made of a Swedish hot-working steel that has been hardened to withstand long, arduous use without deforming. Heat supply to the rear body is handled and controlled by an external ring element. Where the material requires accurate temperature control, a separate sensor, which measures the temperature in the middle of the material of the rear sleeve is used. Our ceramic insulation, which has a thermal conductivity only 7% that of steel, is used to insulate the rear body from the tool.

Heatlock Torpedo Baureihe Einzelfach-Ausführung
Die einfache Art, Einzelfach-Formen mit Direktanguß zu bauen. Die hintere Hülse ermöglicht den Einsatz unserer bewährten Torpedos auch bei Einzelfach-Ausführungen. Auf diese Weise lassen sich Einzelfach-Formen mit Direktan-guß an Flächen verwirklichen, an denen dies bisher auf Schwierigkeiten stieß, z, B. an Neigungen. Die Hülse besteht aus warmfestem, gehärtetem Schwedenstahl, der langen Dauereinsatz ohne Verformung verträgt.
Die Wärmezufuhr am hinteren Torpedokörper erfolgt durch einen außen angeordneten Ringheizer. Falls der zu verarbeitende Kunststoff eine genaue Temperaturüberwachung verlangt, ist ein zusätzlicher Temperaturfühler inmitten des Werkstoffes der hinteren Hülse vorzusehen.
Unser keramischer Isolierring weist nur 7 % der Wärmeleitfähigkeit von Stahl auf und isoliert den hinteren Torpedokörper wirksam von der Form.

Flerfacksmontering
Multi Cavity Assembly
Mehrfachausführung

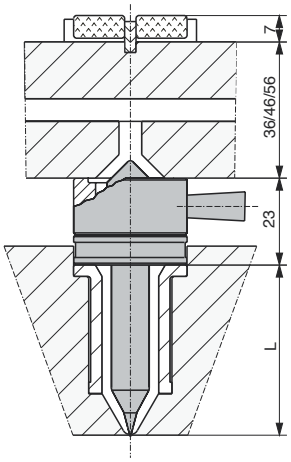

Enfacksmontering / Single Cavity Assembly / Einzelfachausführung

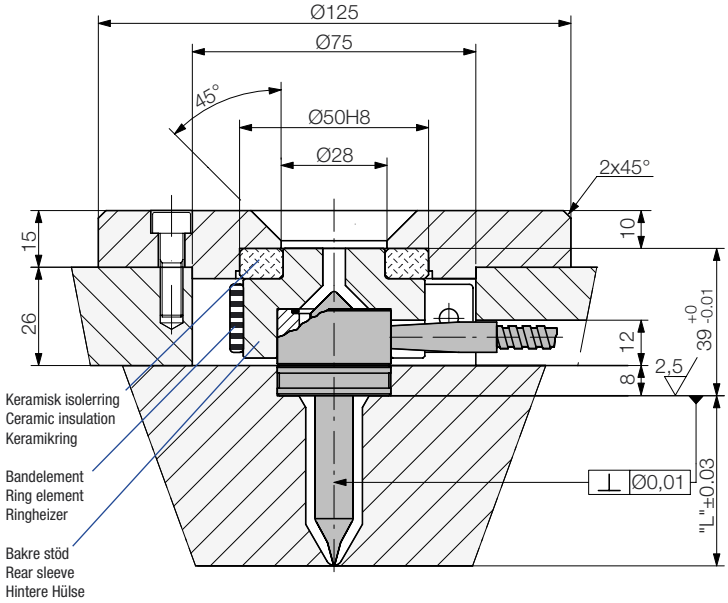

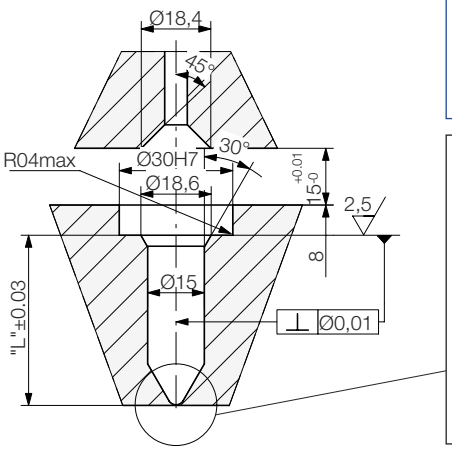

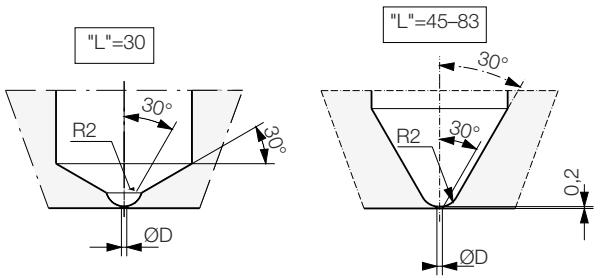

© LKM Heatlock Co Ltd

Intagsarean vid olika intagsdiametrar och olika lägen på torpeden
I intilliggande tabell kan ni se hur intagsarean påverkas av att torpeden flyttas framåt, kortar "L"-måttet. Genom att man flyttar fram torpedspetsen i intaget så ökar spetsens tvärsektion i delningsplanet och man får därigenom en högre temperatur på spetsen i själva intagspunkten. Detta möjliggör att använda en större intagsdiameter utan att höjden på intagsresten växer nämnvärt.Börja med att fastställa torpedspetsens verkliga läge vid driftstemperatur. Det är nödvändigt att torpedspetsen ligger exakt i delningsspåret för att uppnå maximalt resultat. När torpedspetsen är framflyttad så korta av spetsen så att den inte sticker ut genom intaget.
I och med att torpedspetsen i varmt tillsånd går in i intagshålet kommer intaget i själva verket att få formen av ett ringintag. Torpedspetsen har längst fram en diameter på 0,2 mm. Om man väljer en intagsdiameter på 1,0 mm kommer spalten i ringintaget altså att bli 0,47 mm².
Eftersträvas ett minimalt intag kan man genom att spetsa till nålen maximalt välja en intagsdiameter så liten som 0,6-0,7 mm. Vid montering skall spetsen i uppvärmt tillstånd ligga 0,1 mm bakom delningsplanet. Lämpligt upp till en skottvolym på c:a 25 g PP eller motsvarande.

Torpedo tip positioned in the partingline

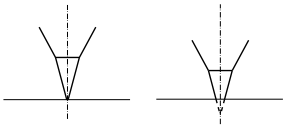

Torpedo tip positioned in the partingline, moved forward and shortened

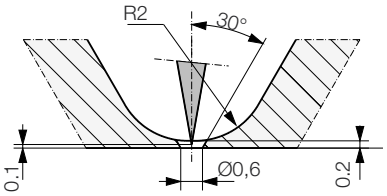

Min. intagsrest / Min. gate residue / Geringstmöglicher Angußrest

	Gate diameter mm			
L-dim.	0,8	1,0	1,2	1,4
L	0,47(0,47)	0,75(0,75)	1,10(1,10)	1,51(1,51)
L-0,1	0,45(0,44)	0,74(0,72)	1,08(1,07)	1,49(1,48)
L-0,2	0,42(0,40)	0,71(0,68)	1,05(1,03)	1,46(1,44)
L–0,3	0,40(0,35)	0,68(0,64)	1,03(0,98)	1,44(1,39)
L–0,4	0,37(0,30)	0,65(0,58)	1,00(0,93)	1,40(1,33)
	Gate area mm² for "L"=45–83 / ("L"=30)			

Flow area in the gate when moving the Heatlock Torpedo forward
Adjacent can you see how the flow area in the gate is affected when the torpedo tip is moved forward further into the gate, shortening the "L"-measurment.
When mowing the tip forward do the cross section of the tip at the parting line increase resulting in an higher temperature at the gate. It will also allow the flow area to be larger without increasing the residue on the part a lot.Before you start to move the tip forward must you determine exact position of the tip in the gate, the torpedo must be in the production temperature when this is done. For best result and nicest residue is it important that the tip is located in the same level as the parting line.
When the torpedo is moved forward shorten the tip so it will be in the parting line when heated. On injection moulding with very short cycle times and short injection times, it may be necessary to design gate cooling so that it does not overheat.
Since, when warm, the torpedo tip enters the gate hole, the gate itself will be ring-shaped. The diameter of the torpedo tip at the end is 0.2 mm. If a gate diameter of 1.0 mm is chosen, the gap at the ring gate will thus be 0,47 mm².
If a minimal gate is required, a gate diameter of as little as 0.6-0.7 mm can be obtained by making the needle as pointed as possible. On installation, the tip when warm must be 0.1 mm behind the parting line. This arrangement is suitable up to a shot volume of about 25 g PP or equivalent.

Angußquerschnitt bei unterschiedlichen Angußdurchmessern und unterschiedlichen Torpedostellungen
Die nachstehende Tabelle zeigt den Einfluß der nach vorn verlegten Torpedospitze auf den Angußquerschnitt sowie die Verkürzung des Maßes "L". Durch Vorverlegen der Torpedospitze in den Anguß vergrößert sich deren Querschnitt in der Teilungsebene. Dadurch entsteht eine höhere Temperatur der Spitze im Angußpunkt. Auf diese Weise läßt sich ein größerer Angußdurchmesser erzielen, ohne den Angußrest nennenswert zu erhöhen.
Bestimmen Sie zunächst die wirkliche Stellung der Torpedospitze bei Betriebstemperatur. Um optimale Ergebnisse zu erzielen, muß sich die Spitze genau an der Teilungsebene befinden. Nach dem Vorverlegen der Spitze ist sie so weit zu kürzen, daß sie nicht aus dem Anguß herausragt. Da die Torpedospitze im heißen Zustand in die Angußbohrung hineinragt, entsteht praktisch ein ringförmiger Anguß.
Die Torpedospitze weist vorn einen Durchmesser von 0,2 mm auf. Wird ein Angußdurchmesser von 1,0 mm gewählt, entsteht somit im Ringanguß ein Spalt von 0,47 mm². Wird ein möglichst geringer Angußrest verlangt, läßt sich der Angußdurchmesser bei gleichzeitigem starkem Anspitzen der Nadel auf 0,6 bis 0,7 mm verkleinern. Nach dem Einbau muß die Nadelspitze im heißen Zustand 0,1 mm hinter der Teilungsebene liegen. Geeignet für Schußgewichte bis etwa 25 g PP oder vergleichbarem Kunststoff.

Diagrammet ger riktvärde på den intags-diameter, som behövs för olika plaster och skottvikter.

OBS! En för liten intagsdiameter betyder bl.a. att onödigt hög temperatur måste ställas in på munstycket för att intaget ej skall frysa mellan skotten.

1. Lågviskösa (PS, PE, PP)
2. Medelviskösa (ABS, SAN, PA, POM)
3. Högviskösa (PC, PMMA, Noryl, fyllda material)

The diagram gives guideline figures for the gate diameter needed for different plastics and shot weights.

Note: If the gate diameter is too small, an unnecessarily high bushing temperature will have to be set for the gate not to freeze between shots.

1. Low-viscosity material (PS, PE, PP)
2. Medium-viscosity material (ABS,SAN, PA, POM)
3. High-viscosity material (PC, PMMA, Noryl)

Das Diagramm gibt Richtwerte für den bei unterschiedlichen Kunststoffen und Schußgewichten benötigten Angußdurchmesser an.

ACHTUNG! Zu geringer Angußdurchmesser erfordert eine unnötig hohe Temperatur der Düse, damit der Anguß zwischen den Schüssen nicht erstarrt. Säubern der Düse, auswechseln von Spiralheizkörpen bzw. Temperaturfühler.

1. Niederviskose Kunststoffe (PS, PE, PP)
2. Mittelviskose Kunststoffe (ABS, SAN, PA, POM)
3. Hochviskose Kunststoffe (PC, PMMA, Noryl)

Skottvikt per munstycke
Shot-weight per nozzle
Schußgewicht je Düse

g

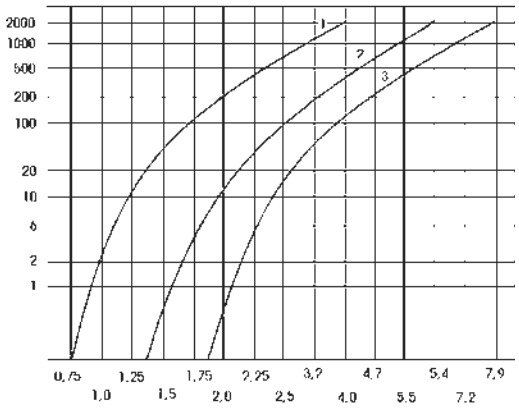

Intagsdiameter
Gate diameter
Angußdurchmesser

mm

© LKM Heatlock Co Ltd

This Heatlock series, below, is currently being replaced by the A1-series of nozzles.
Before you design check availability, stock is gradually decreased.
Spare parts will be available until at least end of 2007 (apart form NPT1 bodies)

Montering av bussning / Bushing Assembly / Einbau von Heatlock-Düsen

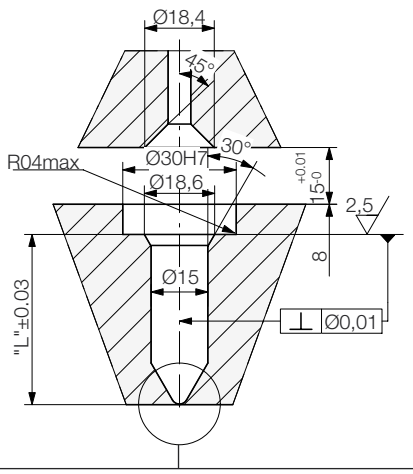

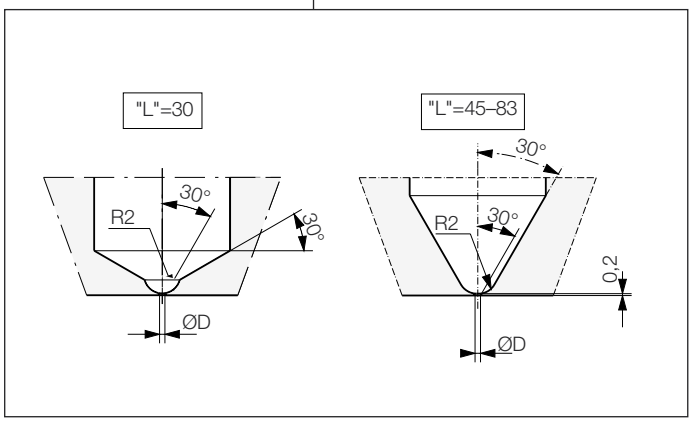

SE Djupet på hålet för själva torpedspetsen skall göras lika med torpedens inbyggnadsmått "L". Spetsen kommer då att in varmt tillstånd sticka in i intagningshålet och ligga ungefär i höjd med den formgivande ytan. Intagningsresten blir då minsta möjliga.
Bakdelen av torpeden skall försänkas min. 8 mm i formstället så att isolerringen får stöd längs hela sin höjd. Om försänkningen måste göras djupare än 8 mm skall resten av hålet göras med större diameter än 30 mm så att det inte uppstår metallisk kontakt mellan bakdelen och den kalla formen.
Det är viktigt att intagets längd blir 0,2 mm enligt vidstående skisser. Om längden blir större kommer man att få en längre intagsrest än vad som är nödvändigt. Samtidigt blir tryckförlusterna större och därmed friktionsuppvärmningen i intagsområdet onödigt stor.
För utformning av hålets främre del, se skisser.

GB The depth of the hole for the torpedo tip itselfmust be made equal to the installation dimension "L" of the torpedo. When hot, the tip will then project into the gate hole and be aproximately in line with the moulding surface. This results in minimum gate residue.
The rear end of the torpedo must be countersunk at least 8 mm in the steel of the mould so that the insulating ring is supported over its entire height. If the countersunk must be deeper than 8 mm, the rest of the hole must be made with a diameter larger than 30 mm, so that there is no metal-to-metal contact betweeen the rear of the torpedo and cold mould.
It is important that the length of the gate is 0.2 mm as shown adjacent. If the length is greater, the gate residue will be longer then necessary. At the same time, the preassure losses will be greater, and this will result in excessive frictional heating in the region of the gate.

DE Die Bohrungstiefe für die eigentliche Torpedospitze muß dem Torpedo-Einbaumaß L entsprechen. Im heißen Zustand ragt dann die Spitze in die Angußbohrung und liegt etwa in gleicher Höhe mit der formgebenden Fläche. Auf diese Weise entsteht ein geringstmöglicher Angußrest.
Das Torpedo-Hinterteil ist mindestens 8 mm tief in der Form zu versenken, um den Isolierring in seiner gesamten Länge zu stützen. Falls eine Versenkung von größerer Tiefe als 8 mm erforderlich ist, muß die restliche Bohrung auf mindestens 30 mm aufgebohrt werden, um metallische Berührung zwischen Torpedo-Hinterteil und kalter Form zu vermeiden.
Besonders zu beachten ist die Angußlänge von 0,2 mm gemäß nachstehender Zeichnungen. Bei größerer Länge entsteht ein unnötig langer Angußrest. Gleichzeitig steigen die Druckverluste und damit die friktionsbedingte Erwärmung des An-gußbereiches.
Gestaltung des vorderen Bohrungsteiles: siehe Zeichnungen.

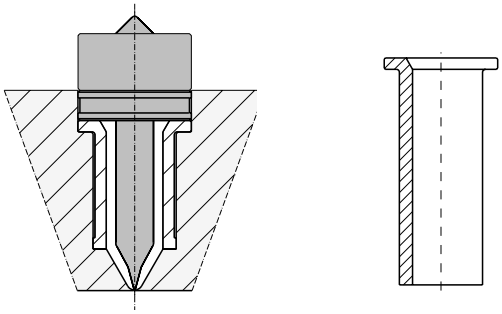

SE

Isolerhylsa för torped

Isolerar flytkanalen runt torpedspetsen från formplattan. Detta minskar avkylningen av flytkanalen så att den flytbara spalten runt torpeden ökar. Formsprutning av material som kräver hög massatemperatur. Fyllda material blir härigenom möjliga.
Isolerhylsan är tillverkad av ett varmarbetsstål som härdats till Hrc 46-48. Isolerhylsan levereras enligt fig.1, och passar till torpeder med "L"=30-70 mm.Bearbeta hylsan enligt fig.2, längden kapas till erforderlig längd beroende på Torpedens L-mått, resp. hur långt fram man kan gå med hylsan i formen. Eftersom hylsan kommer att förlänga sig något när torpeden kommer upp i arbetstemperatur bör hylsan i kallt tilstånd ej bottna på bottenplanet. Lämplig luftspalt 0,02-0,04 mm beroende på torpedlängd.

GB

Insulating sleeve for torpedo

The insulating sleeve insulates the flow channel around the torpedo tip from the mould plate. This reduces cooling of the flow channel, so that the flow gap around the torpedo increases. This makes it possible to inject materials that require a high mass temperature, and filled materials. The insulating sleeve is made of a hot-working steel hardened to Hrc 46-48. The insulating sleeve is supplied as shown in Fig. 1, and fits torpedoes with L=30-70 mm. Machine the sleeve as shown in Fig. 2. Cut the sleeve to the required length, which is a function of the L-dimension of the torpedo and of how far forward the sleeve can be positioned in the mould. Since the sleeve will expand slightly when the torpedo reaches its working temperature, it should not reach the bottom plane when cold. A suitable air gap is 0.02-0.04 mm, depending on torpedo length.

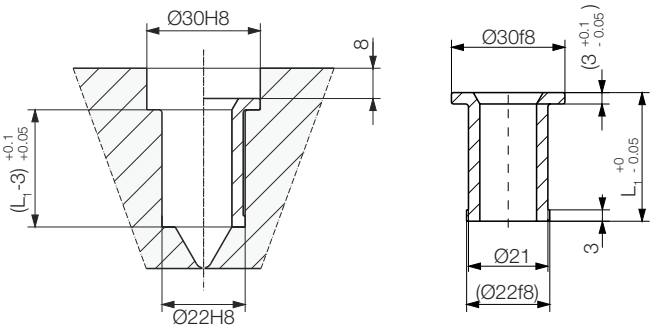

Torpedo L=	L_1
30 mm	(L-4.9)
45–83 mm	(L-11.2)

DE

Isolierhülse für Torpedo

Die Torpedo-Isolierhülse sorgt für die thermische Trennung zwischen Formplatte und Fließkanal im Bereich der Torpedospitze. Dadurch verringern sich die Wärmeverluste im Fließkanal und der Fließspalt um den Torpedo wird größer. Dies ermöglicht das Formspritzen von Kunststoffen mit hoher Fließtemperatur und mit Füllmittel. Die Isolierhülse besteht aus warmfestem Stahl und ist auf HRC 46-48 gehärtet. Lieferung gemäß Abb. 1, passend für Torpedo mit L=30 bis 70 mm. Die Hülse ist gemäß Abb. 2. zu bearbeiten: Auf erforderliche Länge kürzen, je nach Längenmaß des Torpedos bzw. je nach Einbaubedingungen. Wegen der Längenzunahme bei Betriebstemperatur darf die Hülse im kalten Zustand nicht den Bohrungsgrund erreichen.
Geeigneter Luftspalt je nach Torpedolänge 0,02 bis 0,04 mm.

Heatlock AB © 040115. Notice: latest version always available on our website, www.heatlock.com

© LKM Heatlock Co Ltd

This Heatlock series, below, is currently being replaced by the A1-series of nozzles.
Before you design check availability, stock is gradually decreased.
Spare parts will be available until at least end of 2007 (apart form NPT1 bodies)

Conversion Table: inches / mm

inches	mm	inches	m.m
1	25,4	34	863.6
2	50.8	35	889.0
3	76.2	36	914.4
4	101.6	37	939.8
5	127.0	38	965.2
6	152.4	39	990.6
7	177.8	40	1016.0
8	203.2	41	1041.4
9	228.6	42	1066.8
10	254.0	43	1092.2
11	279.4	44	1117.6
12	304.8	45	1143.0
13	330.2	46	1168.4
14	355.6	47	1193.8
15	381.0	48	1219.2
16	406.4	49	1244.6
17	431.8	50	1270.0
18	457.2	51	1295.4
19	482.6	52	1320.8
20	508.0	53	1346.2
21	533.4	54	1371.6
22	558.8	55	1397.0
23	584.2	56	1422.4
24	609.6	57	1447.8
25	635.0	58	1473.2
26	660.4	59	1498.6
27	685.8	60	1524.0
28	711.2	61	1549.4
29	736.6	62	1574.8
30	762.0	63	1600.2
31	787.4	64	1625.6
32	812.8	65	1651.0
33	838.2	66	1676.4

inches		mm	inches		mm
1 / 64	0.015625	0.396875	33 / 64	0.515625	13.096875
1 / 32	0.031250	0.793750	17 / 32	0.531250	13.493750
3 / 64	0.046875	1.190625	35 / 64	0.546875	13.890625
1 / 16	0.062500	1.587500	9 / 16	0.562500	14.287500
5 / 64	0.078125	1.984375	37 / 64	0.578125	14.684375
3 / 32	0.093750	2.381250	19 / 32	0.593750	15.081250
7 / 64	0.109375	2.778125	39 / 64	0.609375	15.478125
1 / 8	0.125000	3.175000	5 / 8	0.625000	15.875000
9 / 64	0.140625	3.571875	41 / 64	0.640625	16.271875
5 / 32	0.156250	3.968750	21 / 32	0.656250	16.668750
11 / 64	0.171875	4.365625	43 / 64	0.671875	17.065625
3 / 16	0.187500	4.762500	11 / 16	0.687500	17.462500
13 / 64	0.203125	5.159375	45 / 64	0.703125	17.859375
7 / 32	0.218750	5.556250	23 / 32	0.718750	18.256250
15 / 64	0.234375	5.953125	47 / 64	0.734375	18.653125
1 / 4	0.250000	6.350000	3 / 4	0.750000	19.050000
17 / 64	0.265625	6.746875	49 / 64	0.765625	19.446875
9 / 32	0.281250	7.143750	25 / 32	0.781250	19.843750
19 / 64	0.296875	7.540625	51 / 64	0.796875	20.240625
5 / 16	0.312500	7.937500	13 / 16	0.812500	20.637500
21 / 64	0.328125	8.334375	53 / 64	0.828125	21.034375
11 / 32	0.343750	8.731250	27 / 32	0.843750	21.431250
23 / 64	0.359375	9.128125	55 / 64	0.859375	21.828125
3 / 8	0.375000	9.525000	7 / 8	0.875000	22.225000
25 / 64	0.390625	9.921875	57 / 64	0.890625	22.621875
13 / 32	0.406250	10.318750	29 / 32	0.906250	23.018750
27 / 64	0.421875	10.715625	59 / 64	0.921875	23.415625
7 / 16	0.437500	11.112500	15 / 16	0.937500	23.812500
29 / 64	0.453125	11.509375	61 / 64	0.953125	24.209375
15 / 32	0.468750	11.906250	31 / 32	0.968750	24.606250
31 / 64	0.484375	12.303125	63 / 64	0.984375	25.003125
1 / 2	0.500000	12.700000	1 / 1	1.000000	25.400000

inches	mm	inches	mm	inches	mm
0.001	0.0254	0.01	0.254	0.1	2.54
0.002	0.0508	0.02	0.508	0.2	5.08
0.003	0.0762	0.03	0.762	0.3	7.62
0.004	0.1016	0.04	1.016	0.4	10.16
0.005	0.1270	0.05	1.270	0.5	12.70
0.006	0.1524	0.06	1.524	0.6	15.24
0.007	0.1778	0.07	1.778	0.7	17.78
0.008	0.2032	0.08	2.032	0.8	20.32
0.009	0.2286	0.09	2.286	0.9	22.86

multiply with	from to	to from	multiply with
0,0394	inch	millimeters	25,4
0,0016	$inch^2$	$millimeters^2$	645,16
0,061	$inch^3$	$centimeters^3$	16,3871
0,2642	gallon (U.S.)	liter	3,7854
0,03527	oz. (avdp.)	gram	28,3495
2,2044	pound	kilogram	0,4536
62,43	lbs/ft^3	g/cm^3	0,0160
1,8°C+32	°F	°C	(°F-32)/1,8
0,145	psi	kPa	6,8948
14,2247	psi	kg/cm^2	0,0703

This Heatlock series, below, is currently being replaced by the A1-series of nozzles.
Before you design check availability, stock is gradually decreased.
Spare parts will be available until at least end of 2007 (apart form NPT1 bodies)

Date: 031002, © LKM Heatlock Co Ltd

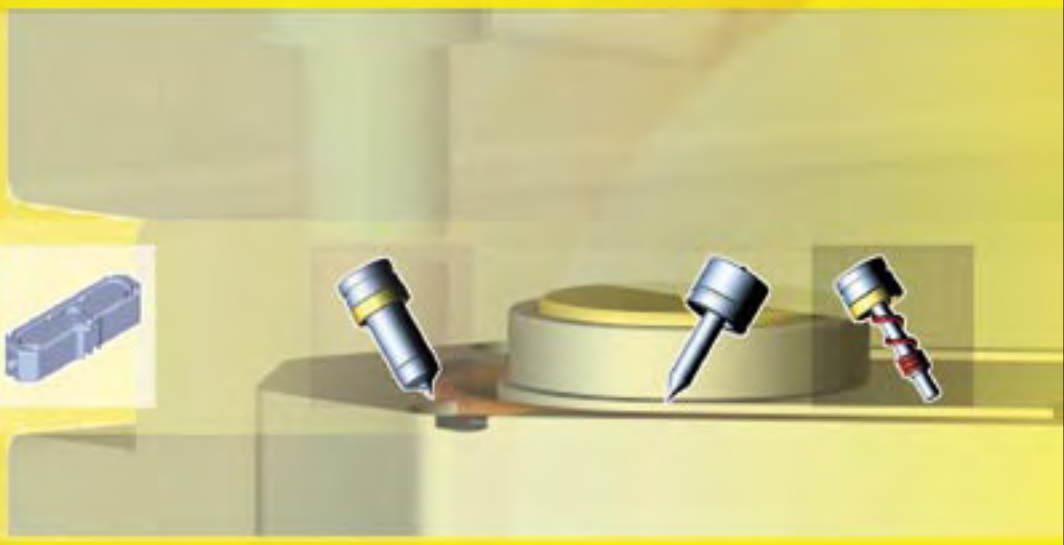

More information available at
www.heatlock.com
or contact your local distributor of Heatlock

LKMHEATLOCK

LKM HEATLOCK CO LTD.
2/F., Cheung Kong Electronic Building
4 Hing Yip Street, Kwun Tong
Kowloon, Hong Kong
Tel (852) 2342 2248, 2341 2321
Fax (852) 2343 0990, 2951 6199, 2341 8544
E-mail lkmheatlock@lkm.com.hk

DONGGUAN LKM HEATLOCK CO LTD.
Qiao Li Industrial Area, Chang Ping
Dongguan, Guandong, China
Postal Code 523586
Tel (86) 0769-333 4599
Fax (86) 0769-381 0484
E-mail lkmheatlock@lkm.com.hk

HEATLOCK AB
S:t Annagatan 3 SE-532 23 Skara
Sweden
Tel +46 (0)511 132 00
Fax +46 (0)511 172 85
E-mail hot.runner@heatlock.com
www.heatlock.com